USE OF CRITICAL CHAIN SCHEDULING TO INCREASE AIRCRAFT AVAILABILITY

THESIS

Daniel. D. Mattioda, Captain, USAF

AFIT/GLM/ENS/02-11

DEPARTMENT OF THE AIR FORCE
AIR UNIVERSITY

AIR FORCE INSTITUTE OF TECHNOLOGY

Wright-Patterson Air Force Base, Ohio

APPROVED FOR PUBLIC RELEASE; DISTRIBUTION UNLIMITED

The views expressed in this thesis are those of the author and do not reflect the official policy or position of the United States Air Force, Department of Defense, or the U. S. Government.

AFIT/GLM/ENS/02-11

USE OF CRITICAL CHAIN SCHEDULING TO INCREASE AIRCRAFT AVAILABILITY

THESIS

Presented to the Faculty

Department of Operational Sciences

Graduate School of Engineering and Management

Air Force Institute of Technology

Air University

Air Education and Training Command

In Partial Fulfillment of the Requirements for the

Degree of Master of Science in Logistics Management

Daniel D. Mattioda, B.S.

Captain, USAF

March 2002

APPROVED FOR PUBLIC RELEASE; DISTRIBUTION UNLIMITED

AFIT/GLM/ENS/02-11

USE OF CRITICAL CHAIN SCHEDULING TO INCREASE AIRCRAFT AVAILABILITY

Daniel D. Mattioda, BS
Captain, USAF

Approved:

/s/_____ _____
Stephen M. Swartz, Maj. USAF (Advisor) Date
Assistant Professor of Logistics Management
Department of Operational Sciences

/s/_____ _____
Stanley E. Griffis, Maj. USAF (Reader) Date
Assistant Professor of Logistics Management
Department of Operational Sciences

Acknowledgements

I would like to thank my beautiful wife for all her support and inspiration she has given me during these last 18 months. Her smiling face and words of wisdom made the sun come up every morning. To my wonderful sons, I spent too much time away and missed too much of your life--Dad is coming home!

I would like to express sincere gratitude to my advisors, Major Stephen Swartz, and Major Stanley Griffis whose guidance and support were needed and appreciated. I learned a tremendous amount during this research. I would also like to thank Kent Mueller, Col USAF (Ret), whose sponsorship made this research possible. I am greatly indebted to MSgt Floyd Eaddy and his ISO maintenance team at Hurlburt Field, Florida, whose diligence in obtaining data for my thesis was unrelenting.

To all the foreign officers in my class, your ability and skills are humbling. It has been a pleasure to be in the same class as you. Lt Col di Risio (Argentinean Air Force), you are a leader among leaders. It has been an honor and privilege to work with you. To my fellow American officers, thanks for all your support. I couldn't have done it without you. Special thanks to Captains Heinz Huester, Ben Skipper, Craig Punches, Todd Bertulis, and Lieutenant Rob Overstreet.

Special recognition needs to be given to Ms. Janice Farr. Her attention to detail and assistance in formatting this thesis were invaluable to its completion.

Daniel D. Mattioda

Table of Contents

Page

Acknowledgements v

List of Figures ix

List of Tables x

Abstract xi

I. Introduction 1

Background 1
Problem Statement 6
Research Questions 6
Research Methodology 7
Assumptions 7
Scope/Limitations 10
Summary 10

II. Literature Review 11

Introduction 11
Isochronal Inspection Process 12
Project 15
Project Management 16
Critical Path Method 16
Theory of Constraints 23
Critical Chain 26
Safety Time 27
Wasted Safety Time 28
Critical Chain Safety Buffers 30
Determination of Buffer Size (Newbold, 2001: 93) 34
Management Use of Buffers 35
Task Duration 37
Slack 37
Single verses Multi-Project Implementation 37
Critical Chain and the ISO Process 38
Summary 40

III. Methodology 42

Introduction 42
Data Collection 42
Activity Parameters 44
Description of Variables 45
Calculations of Probabilistic Task Durations 46
Microsoft Project 2000© 49
Measures of Performance 51
Experimental Manipulation 52
Conclusion 52

IV. Results 53

Introduction 53
Critical Path and Critical Chain Estimations 53
Simulation Results 54
Friedman *Fr* Test 55
Friedman *Fr* Test Results 56
Model Durations 57
Aircraft Availability and Scheduling Error 57
Critical Path Results 59
Critical Chain Lower Estimate Results 60
Critical Chain Upper Estimate Results 61
Primary Research and Investigative Questions 62
Conclusion 67

V. Conclusions and Recommendations 68

Introduction 68
Findings 69
Overall Findings 73
Additional Findings 73
Managerial Implications 74
Limitations 75
Future Research 76
Summary of Findings 77

Appendix A. ISO Task Information 78

Appendix B. ISO Work Breakdown Structure 80

Appendix C. ISO Manning Requirements 82

Appendix D. Simulation Values 83

Appendix E. Simulation Results 91

Appendix F. Shapiro – Wilk W Test 92

Appendix G. Friedman *Fr* Test Results 92

Appendix H. Simulation Results Ascending Order 94

Appendix I. CP Aircraft Availability Lost and Aircraft Scheduling Lost 95

Appendix J. CC Aircraft Availability Lost and Aircraft Scheduling Lost 96

Appendix K. CP1 WBS 98

Appendix L. CP2 WBS 99

Appendix M. CP3 WBS 100

Appendix N. CC1 WBS 101

Appendix O. CC2 WBS 102

Appendix P. CC3 WBS 103

Appendix Q. Current ISO Shift Schedule 104

Appendix R. Reduced ISO Shift Schedule 105

Appendix S. Surge ISO Shift Schedule 106

Bibliography 107

Vita 110

List of Figures

Page

Figure 1. Work Card 1-050 9

Figure 2. Work Card I-003 13

Figure 3. Work Card 1-050 14

Figure 4. Project Network 17

Figure 5. Dependency 18

Figure 6. Project Network 20

Figure 7. Critical Path 22

Figure 8. Critical Path 25

Figure 9. Critical Chain 27

Figure 10. Padding of Individual Tasks 28

Figure 11. Sequential Tasks 29

Figure 12. Parallel Tasks 30

Figure 13. Padding of Individual Tasks 31

Figure 14. Project Buffer 31

Figure 15. Feeding Buffer 32

Figure 16. Resource Buffer 33

Figure 17. Critical Chain Schedule 33

Figure 18. Standard Beta Distribution 47

Figure 19. Model Distributions 54

Figure 20. Model Means 56

Figure 21. Aircraft Availability and Aircraft Scheduling Loss 58

List of Tables

Page

Table 1. Activities for Project 20

Table 2. CPM vs. CC 37

Table 3. WBS Information 44

Table 4. Shift Hours 46

Table 5. Beta A and B Values 49

Table 6. Experimental Design 52

Table 7. Critical Path and Critical Chain ISO Durations (Estimated) 53

Table 8. Shapiro-Wilk W Test for Normality 55

Table 9. Model Duration Comparison 57

Table 10. CP Aircraft Scheduling 59

Table 11. CC Aircraft Scheduling Using Lower Estimate 60

Table 12. CC Aircraft Scheduling Using Upper Estimate 61

Table 13. CP Durations 63

Table 14. CC Durations 65

Table 15. CC to CP Comparison 66

Table 16. CP Results 70

Table 17. CC Lower Estimation Results 71

Table 18. CC Upper Estimation Results 72

Abstract

United States Air Force Special Operations Command (AFSOC) has a minimal number of aircraft at its disposal. As a result, the aircraft are considered high demand, low-density (small number in Air Force inventory) weapon systems. Any chance to increase aircraft availability would greatly enhance the capability of AFSOC.

Isochronal maintenance (ISO) conducted once every 365 days (per AFI for C- 130 aircraft) provides the best opportunity to increase aircraft availability by improving the scheduling of tasks and accurately estimating the inspection duration. Scheduled maintenance portrays the characteristics of projects, therefore, this thesis proposed that Critical Chain (CC) scheduling, a project management technique, could provide an improved ISO schedule reducing aircraft downtime.

The ISO inspection process was modeled three ways (1) existing process, (2) task constraints removed, and (3) task and resource constraints removed. 100 simulated aircraft inspections took place in each model. The simulated duration times were compared to estimates provided by the use of Critical Path and Critical Chain scheduling techniques.

Critical Chain scheduling techniques did not directly increase aircraft availability. However, Critical Chain scheduling did identify the potential for increasing aircraft availability by removing policy and scheduling constraints.

USE OF CRITICAL CHAIN SCHEDULING TO INCREASE AIRCRAFT AVAILABILITY

I. Introduction

Background

The United States Special Operations Command (USSOCOM) tasks the United States Air Force Special Operations Command (AFSOC) with providing special operations aircraft at a moments notice to all corners of the globe. Due to its special mission characteristics and the resulting uniqueness of the aircraft, AFSOC has a minimal number of aircraft at its disposal. There are 11 MC-130Hs, 8 AC-130Hs and 13 AC-130Us permanently assigned to the 16th Special Operations Wing (SOW) at Hurlburt Field, Florida. The 16 SOW is the only active duty United States Air Force (USAF) special operations wing in the continental United States (CONUS). The AC-130s in use by AFSOC are the only gun ships in the USAF inventory. As a result, the aircraft of the 16 SOW are considered high demand, low-density (small number in Air Force inventory) weapon systems.

From 1 August 2000 to 31 July 2001, the above-mentioned aircraft were deployed a total of 891 aircraft days to 146 temporary duty (TDY) locations. These TDYs included joint exercises with the United States Army, Navy, and Marine Corps, along with training scenarios with foreign military units and real-world operational taskings.

In order to meet those operational requirements, the aircraft are routinely inspected to ensure airworthiness. These inspections, along with their associated maintenance, reduce the availability of an already critical asset. Any chance to increase aircraft availability would greatly enhance the capability of AFSOC.

There are two basic ways to increase overall aircraft availability. The first is to increase the number of aircraft by additional purchases. At a time of decreasing defense spending, purchasing more special operations force (SOF) aircraft, in particular MC-130Hs, AC-130Hs, and AC-130Us, is not a consideration. The second way is to minimize aircraft down time. It is this method of increasing availability that this thesis will investigate.

Aircraft down time is a result of either of two circumstances: unscheduled or scheduled maintenance. Unscheduled maintenance occurs when the aircraft breaks due to unforeseen aircraft equipment malfunctions and/or improper maintenance practices. Unscheduled maintenance cannot be planned for in advance, and as such, does not provide a viable opportunity to decrease downtime. Scheduled maintenance, on the other hand, can be planned for in advance.

Scheduled maintenance encompasses the routine servicing of aircraft and scheduled aircraft inspections. Routine servicing of the aircraft occurs at predetermined points during the maintenance cycle. Examples of servicing would be refueling the aircraft, filling the liquid oxygen (LOX) converters, and checking the engine oil levels and aircraft hydraulic reservoirs for the correct fluid levels and adding fluid if required. This type of scheduled maintenance is simple, and most tasks are completed in a minimal amount of time. Trying to complete these tasks faster raises safety issues and may not

provide much room for improvement. The correct sequencing of these tasks, however, could provide room for improvement, although the correct management of, or improvement upon scheduled inspections appears to offer greater potential.

Scheduled inspections are very complex, involving many tasks with multiple sub tasks. It is this area where efficient scheduling of resources (personnel and equipment) can reap the greatest benefits, most importantly reduced downtime, thereby increasing aircraft availability.

The Isochronal Inspection (ISO) is a thorough inspection of the aircraft, which occurs every 365 days on all C-130 type aircraft. They are divided into two different categories of inspections called "Minor" and "Major." There are 3 minor inspections numbered 1, 2 and 3 while the major inspection is number 4. Inspections 1 and 3 closely resemble each other (with 3 being a more thorough inspection). Likewise, 2 and 4 are similar in content. However, inspection number 4 is the most thorough and labor intensive of the four inspections. The minor and major inspection requirements are contained in the 1C-130A-6WC-15 work card deck. A work card details the inspection requirements for a certain area of the aircraft as well as the qualifications of the mechanic who performs the inspection, the number of mechanics required, and the estimated time to complete the inspection. A more thorough description of the minor and major inspections will be conducted in chapter 2. These four inspections constitute one complete maintenance cycle. Each inspection is accomplished by performing specific parts of the complete minor and major inspection in conjunction with other inspections.

Prior to 1999, ISO maintenance on SOF-130 aircraft took 10 days. An initiative was taken in the fall of 1999 to evaluate the isochronal inspection process and use

Microsoft Project 98© to define the critical path. Once the critical path was defined, the workforce shifted focus from doing work with available resources (personnel, in particular) to completing work in a set order that focused on the critical path. ISO maintenance time decreased 10 percent to 9 days. Inspections, time changes (equipment that is replaced after a certain amount of flight, operating, or calendar time) and any relevant time compliance technical orders (TCTOs) are accomplished, when possible, while the aircraft is in ISO.

At this time, the work cards were reviewed and "scrubbed" for relevancy and accuracy by ISO supervision and maintenance personnel. This "scrub" evaluated the inspection package for work that might not be strictly necessary. Any task that was not required or unable to be performed due to deletion of an engineering based requirement was deleted. An example is the wing leading-edge engine bleed air duct sensor inspection. Initially these sensors were required to be inspected during the ISO once the wing leading edges were removed. A design change to the wing resulted in the leading edges only being removed at depot, but the engine bleed air duct sensor inspection was still required during the ISO. ISO technicians submitted a technical order change for the sensor inspection because the leading edges were no longer being removed. The C-130 aircraft engineers at Warner Robins AFB agreed, and the sensor inspection was removed from the work cards and now is accomplished in coordination with the leading edge removal at depot. The deletion of this inspection saved 8 man-hours of maintenance time per aircraft.

Another problem area, which was investigated, was the scheduling of ISO technicians. ISO technicians are the individuals who work on the aircraft during the

inspection. These technicians are made up of the following career fields: aircraft crew chiefs, electrical and environmental, pneudraulic, engine, structural repair, and avionics specialists. These technicians were scheduled according to how much work was required in their individual area and by how to accomplish that work as fast as possible. Their schedule was based on a two-shift operation, with day shift working from 0700-1600 and swing shift from 1500-2300. This work schedule did not take into account the overall workload itself. After the study, technicians were scheduled when they were needed in an effort to best optimize the entire ISO process. To ensure better coordination among technicians, a shift coordinator assumed new responsibilities. The shift coordinators ensured that one specialist was not holding up the work of another specialist. An example in the ISO process occurred when the electricians were accomplishing their electrical power checks. These checks kept the fuel cell specialists from completing their fuel/water screen inspections. Even though the electricians were ahead of schedule in their area, by preventing the fuel cell specialists from completing their work they were not optimizing the overall process. The shift coordinator stepped in and had the electricians suspend their power checks allowing fuel cell technicians to continue their work. This oversight allows for optimization of the whole ISO process and not just one shop's individual area.

With the identification of the critical path and the correct allocation of resources, the ISO time was reduced allowing greater aircraft availability. The saving of 1 day per aircraft in ISO resulted in an increase in aircraft availability of 32 aircraft days (0.25 percent increase). A small amount, but significant in light of the high demand for the aircraft. Any increase in aircraft availability for AFSOC's high-demand, low-density

aircraft fleet is a pivotal factor in mission accomplishment. This 0.25 percent increase is a starting point, but can it get better? The objective of this research is to apply the recently developed project management techniques of "Critical Chain" scheduling to the ISO process in an effort to achieve further improvements.

Problem Statement

Aircraft availability is essential to AFSOC in order to meet mission requirements. Increasing the number of aircraft or reducing existing aircraft down time can increase aircraft availability. Increasing the number of aircraft is not a viable option due to budget constraints. Reducing aircraft down time is a viable alternative. Reducing the ISO flow time may reap the largest aircraft availability gains. Can the current ISO flow be improved upon to reduce aircraft downtime or is the current ISO the best it can be with the allocated resources?

Research Questions

Reducing ISO flow time is key to reducing aircraft down time thus increasing aircraft availability. The primary research question is **"Can the use of Critical Chain scheduling reduce the ISO flow time?"** In order to answer the primary research question, the following subordinate investigative questions must be answered:

1. What are the key differences between Critical Path and Critical Chain methods?
2. What are the results of applying a Critical Path analysis to the ISO project?
3. Are there opportunities for improving the ISO schedule (from the current schedule) using Critical Path?
4. What are the results of applying a Critical Chain analysis to the ISO project?

5. Are there opportunities for improving the ISO schedule (from the current schedule) using Critical Chain?

6. Are there differences in schedule performance for the ISO project between Critical Chain and Critical Path methods?

Research Methodology

The methodology used in this thesis will consist of a two-level investigation. First, an examination of the current ISO process will be conducted to determine the existing critical path. Once the critical path is identified, the second level of investigation will begin. This level will apply the principles of critical chain scheduling techniques and evaluate the results in reducing the project duration. Prioritized recommendations will be made with their associated duration improvements.

Assumptions

The following assumptions are used throughout this work. For the purpose of this study, no additional work is incorporated into the ISO process. Once the ISO process begins the inspection is not interrupted or postponed. Work continues until the inspection is complete.

This study assumes that weather is not a factor in the ISO process. Weather is another issue that stops the ISO process. Hurlburt Field, located on the Gulf of Mexico, is subject to hurricanes from June until November. If a hurricane develops and results in the evacuation of the base, the ISO process could be interrupted. Normally, every opportunity is provided to finish the ISO before the hurricane hits land. The aircraft is then evacuated to a safe haven, usually Ft. Campbell, Kentucky. However, sometimes hurricanes develop faster than expected, and the ISO inspection is not completed and the

aircraft must remain at Hurlburt. The ISO is conducted in Eason hangar and is totally enclosed from the weather. This hangar provides the aircraft protection from the environment, but workers are released from duty to weather the hurricane with their families. This causes a delay in the ISO process.

For this study, the aircraft is assumed available to enter the process at the applicable time with all prerequisite tasks accomplished. Every attempt is made to have the aircraft available to start the ISO process at the required time. However, certain circumstances arise that cause the aircraft to be late. Off-station taskings, where the aircraft is TDY and breaks and can't return to home station, increases the duration of off station missions. These instances are extremely rare.

Individual task duration times are assumed to be accurate from the times posted on the work cards in the "Card Time" block. This time, with the information from the "Type Mech Rqd" and "Mech No." blocks is the average time a mechanic should take to complete all the work on that specific work card. For example, Figure 1 is a work card from the ISO inspection work deck. The "Type Mech Rqd" is an APG (Airplane General), commonly referred to as a crewchief. The "Mech No." is 1, and the "Card Time" is 1:14, which means 1 hour and 14 minutes. This states that the average time to complete this work card by one qualified crew chief is 1 hour and 14 minutes. Experience, training, and condition of aircraft are factors that can either increase or decrease the task duration time. Interviews conducted with the 16th Equipment Maintenance Squadron ISO dock chief, ISO shift coordinator, and ISO technicians determined that the task duration times on the work cards are pessimistic times. According to them, the actual task duration times are 25 to 50 percent less than shown on

the card. Using the documented task times would result in a pessimistic scenario. If improvements are shown with this study, then actual improvements should be even better. Actual improvement times should be an area for further research. It is assumed that while the exact amount of improvement could not be determined at this time, the research results should indicate the relative magnitude of the changes.

CARD NO.	WORK AREA(S)	TYPE MECH REQ.	MECH NO.	CARD TIME	PUBLICATION NUMBER	CHANGE NO.
1-050	6R	APG	1	1:14	T.O. 1C-130A-6WC-15 15 MAY 00	1

MAN MIN	WORK AREA	WORK UNIT CODE SYS	WORK UNIT CODE SUB	PART D-1 / INSPECTION REQUIREMENTS	ELECTRICAL POWER	SERVICE	FIGURE	CARD NO. 1-050
				AFT FUSELAGE - INTERNAL				
040	6R			1. OBSERVE ZONE IAW THE ZONAL OBSERVATION CARD				
005	6R	11	250	2. WITH FOAM INSULATION REMOVED FROM CARGO DOOR. INSPECT STRUCTURE FOR CORROSION: 1701 (REINSTALLATION OF FOAM INSULATION IS A LOCAL OPTION) IN ATC AIRCRAFT WITH LESS THAN 4900 AIRFRAME HOURS				
002	6R	11	340	3. EMERGENCY EXIT FOR POSITVE LOCKING (932)				
010	6R	14	000	4. FLIGHT CONTROL CABLES FOR CONDITION, IAW T.O. 1C-130H-2-00-GE-00-1.				
010	6R	14	000	5. ELEVATOR AND RUDDER BOOST PACKS AND DIVERTER PANELS FOR LEAKS (381) AND SECURITY (730).				
005	6R	14	000	6. RUDDER AND ELEVATOR PUSH-PULL RTODS FOR SECURITY (105) AND BROKEN (070), LOOSE OR MISSING (105) JO BOLTS.				
001	6R	45	100	7. AUXILIARY HYDRAULIC SERVICE CENTER FOR EVIDENCE OF LEAKS (387)				
001	6R	45	1F0	8. AUXILIARY HYDRAULIC RESERVOR FOR SERVICING (WITH RAMP CLOSED) (525) (APPROXIMATELY 1 INCH FROM TOP OF SIGHT GAGE ON MDS PRIOR AF 85-1361) 0 PSI FULL MARK ON AF 85-1361 AND SUBSEQUENT MDS) IF SERVICING IS REQUIRED REFER TO T.O. 1C-130A-2-12JG-10-2				

CARD NO.	WORK AREA(S)	TYPE MECH REQ.	MECH NO.	CARD TIME	PUBLICATION NUMBER	CHANGE NO.
1-050	6R	APG	1	1:14	T.O. 1C-130A-6WC-15 15 MAY 00	1

Figure 1. Work Card 1-050

It is assumed that the mechanic performing the inspection is qualified to perform the task. Specialist skill requirements are required for each task. Work card 1-050 (Fig. 1) shows the "Type of Mech", but does not state the skill level. Qualified means a 3, 5, or 7-level who has been trained on the task required by the work card and that training is properly documented in the individuals Air Force Form 623 (On-The-Job Training Record). This record is the official documentation of technical training that an individual is qualified to perform and/or is being trained to accomplish.

A final assumption is the availability of support equipment and replacement parts. For this initial research, the ideal situation is assumed. Equipment and supplies are

readily available when requested. There is no delay between the time of request and when the equipment or supply arrives or the time is minimum that it does not disrupt the ISO process.

Scope/Limitations

This thesis deals with only the SOF-130 ISO inspection process at Hurlburt Field. The specific recommendations provided by this research will have limited applicability. The SOF–130s stationed at Hurlburt are a different mission design series than the C-130s stationed at Little Rock or Pope AFBs, which leads to different inspection requirements. However, while the specific results are not widely applicable, the process used in the inquiry could be applied successfully in similar circumstances.

Summary

In the preceding pages, the current situation at AFSOC was described as it relates to their high demand, low-density aircraft. The current ISO process resulting from the initial critical path analysis was described. The research and investigative questions were presented, as well as the assumptions, scope and limitations. In Chapter 2, a review of the relevant literature will be presented. Key issues will be addressed, to include treatment of the ISO process under the principles of project management, and the principles of the Theory of Constraint's "Critical Chain" application.

II. Literature Review

Introduction

Military aircraft frequently encounter stresses and activities that are not normally associated with civilian aircraft. The SOF-130 type aircraft are no exception. These 130s do not encounter high gravity turns like the F-15 and F-16 fighters or fly at high attitudes such as the U-2, but nonetheless are exposed to exceptional stresses on a day-to-day basis. The AC-130s' 105mm cannon used to destroy ground targets provides a tremendous amount of stress to the rear of the aircraft each time it is fired. On the AC-130H models, this stress is directed at a 25-year old airframe that has seen action in every military confrontation since the late stages of Vietnam. The newer AC-130Us are nearing 10 years old and beginning to show signs of stress. An example of this stress is minor wing cracks found on the trailing edge of the AC-130 wings due to the repercussions from the firing of the 105mm cannon (Ferrell, 2001).

The MC-130Hs are another fixed wing aircraft assigned to the 16 SOW at Hurlburt Field. Their mission is to provide infiltration, exfiltration and resupply of special operations forces and equipment in hostile or denied territory. Secondary missions include psychological operations (MC-130E/H, 2001). Normal operations for MC-130H aircraft include landings on unimproved runways and low-level flights. These two situations are extremely stressful on the aircraft, just like the 105mm firings for the AC-130s. In order to keep the aircraft flying and able to perform their missions, the ISO process is important in the identification and correction of discrepancies in order to sustain the aircraft in a mission capable posture.

This chapter provides an overview of the ISO process and the reasons for it. An explanation of project management techniques will follow, laying the foundation for the presentation of Critical Chain scheduling. The chapter will end with a discussion on how the current ISO process can be managed with the use of Critical Chain scheduling techniques.

Isochronal Inspection Process

The rationale behind the ISO process is detailed in Technical Order (TO) 1C-130A-6. The inspections prescribed by this manual are accomplished at specified periods by Air Force -130 ISO inspection units. Compliance with this manual is required to assure that latent defects are discovered and corrected before malfunctions or serious failures occur. This TO establishes the inspection, accessory replacement, and functional check flight requirements for the airframe and airborne equipment. The requirements establish what equipment is to be inspected, when it is to be inspected, and what conditions are to be sought. The inspection is the actual physical examination of the equipment. The requirements are designed to direct the attention of maintenance personnel to components and areas (or zones) where defects are suspected to occur under normal operating conditions. These requirements are developed for new aircraft through maintenance engineering experience and comparison of similar installations on in-service aircraft. They are refined and changed over the service life of the aircraft by continually evaluating the performance of the equipment, and through the study of actual operating data for the primary use of the aircraft. The interval between the accomplishment of a requirement is intended to be the longest period of time that an item or component can safely operate without an inspection or observation. When the aircraft is operated under

conditions other than its primary purpose the inspection requirements are adjusted accordingly. These requirements and inspection intervals are the maximum and should not be exceeded. Local conditions (type of missions, special utilization, geographical locations, etc.) may dictate more or less frequent inspection.

The ISO is a thorough inspection of the aircraft, which occurs every 365 days on the C-130 type aircraft. The ISO is divided into two different categories of inspections, called "Minor" and "Major" inspections. The minor and major inspections are accomplished in accordance with the utilization chart shown on the work card I-003 Figure 2.

PUBLICATION NUMBER T. O. 1C- 130A- 6WC- 15 15 MAY 00	INSPECTION REQUIREMENTS INTRODUCTION	FIGURE	CHANGE NO.	CARD NO. I-003

11. THE MINOR AND MAJOR INSPECTION WORK CARD DECK COVERS FOUR INSPECTIONS, WHICH CONSIST OF THREE MINOR ANDONE MAJOR INSPECTION. THESE FOUR INSPECTIONS CONSTITUTE ONE COMPLETE MAINTENANCE CYCLE. EACH INSPECTIONWILL BE ACCOMPLISHED BY PERFORMING SPECIFIC PARTS OF THE COMPLETE MINOR AND MAJOR INSPECTION INCONJUNCTION WITH OTHER INSPECTIONS AS INDICATED BELOW.

WORK CARD DECK	NO 1 MINOR	NO 2 MINOR	NO 3 MINOR	NO 4 MAJOR
PART D- 1 (1C- 130A- 6WC- 15)	X	X	X	X
PART D- 2 (1C- 130A- 6WC- 15)	X		X	
PART D- 3 (1C- 130A- 6WC- 15)		X		X
PART D- 4 (1C- 130A- 6WC- 15)				X

12. INSPECTION REQUIREMENTS WHICH REQUIRE THE USE OF ELECTRICAL POWER FOR ACCOMPLISHMENT ARE IDENTIFIED BY A COMMERCIAL AT SYMBOL (@) PRECEDING THE SPECIFIC REQUIREMENT. INSPECTION REQUIREMENTS WHICH REQUIRE THAT ELECTRICAL POWER BE DISCONNECTED FOR ACCOMPLISHMENT ARE IDENTIFIED BY A COMMERCIAL POUND SYMBOL (#) PRECEDING THE SPECIFIC REQUIREMENT.

13. SPECIFIC LUBRICATION REQUIREMENTS TO BE SATISFIED DURING A COMPLETE INSPECTION ARE LOCATED AT THE END OF EACH WORK CARD DECK (D- 1, D- 2, D- 3 AND D- 4 AS APPLICABLE).

14. ENGINE INSPECTION REQUIREMENTS CONTAINED IN THIS CARD DECK ARE TO BE USED ON INSTALLED ENGINES, ENGINES REMOVED FOR JEFM AND ENGINES REMOVED FOR "HOT SECTION" INSPECTION.

Figure 2. Work Card I-003

There are 3 minor inspections numbered 1, 2 and 3 while the major inspection is number 4. Inspections 1 and 3 closely resemble each other with 3 being a more thorough version of number 1. Likewise, 2 and 4 are similar in content. However, inspection number 4 is

the most thorough and labor intensive of the four inspections. The minor and major inspection requirements are contained in the 1C-130A-6WC-15 work card deck. These four inspections constitute one complete maintenance cycle. Each inspection is accomplished by performing specific parts of the minor and major inspection in conjunction with other inspections.

Each individual work card is annotated with an associated D-number to represent what inspection it is associated with. Figure 3 is a work card from the 1C-130A-6WC-15 work card deck. The work card provides the following types of information: WORK AREA (physical area of inspection), TYPE MECH RQR (Air Force Specialty required to accomplish inspection, i.e. Electro/Environment, Engine, Hydraulic specialist), MECH NO. (number of mechanics required to complete inspection), CARD TIME (how long inspection will take), Work Unit Code (alphanumeric designation for aircraft systems and subsystems), and Inspection Requirements (what equipment is to be inspected, when it is to be inspected, and what conditions are to be sought).

CARD NO.	WORK AREA(S)	TYPE MECH REQ.	MECH NO.	CARD TIME	PUBLICATION NUMBER	CHANGE NO.
1-050	6R	APG	1	1:14	T.O. 1C-130A-6WC-15 15 MAY 00	1

MAN MIN	WORK AREA	WORK UNIT CODE SYS	WORK UNIT CODE SUB	PART D-1 INSPECTION REQUIREMENTS	ELECTRICAL POWER	SERVICE	FIGURE	CARD NO. 1-050
				AFT FUSELAGE - INTERNAL				
040	6R			1. OBSERVE ZONE IAW THE ZONAL OBSERVATION CARD				
005	6R	11	250	2. WITH FOAM INSULATION REMOVED FROM CARGO DOOR. INSPECT STRUCTURE FOR CORROSION: 1701 (REINSTALLATION OF FOAM INSULATION IS A LOCAL OPTION) IN ATC AIRCRAFT WITH LESS THAN 4900 AIRFRAME HOURS				
002	6R	11	340	3. EMERGENCY EXIT FOR POSITVE LOCKING (932)				
010	6R	14	000	4. FLIGHT CONTROL CABLES FOR CONDITION, IAW T.O. 1C-130H-2-00-GE-00-1.				
010	6R	14	000	5. ELEVATOR AND RUDDER BOOST PACKS AND DIVERTER PANELS FOR LEAKS (381) AND SECURITY (730).				
005	6R	14	000	6. RUDDER AND ELEVATOR PUSH-PULL RTODS FOR SECURITY (105) AND BROKEN (070), LOOSE OR MISSING (105) JO BOLTS.				
001	6R	45	100	7. AUXILIARY HYDRAULIC SERVICE CENTER FOR EVIDENCE OF LEAKS (387)				
001	6R	45	1F0	8. AUXILIARY HYDRAULIC RESERVOR FOR SERVICING (WITH RAMP CLOSED) (525) (APPROXIMATELY 1 INCH FROM TOP OF SIGHT GAGE ON MDS PRIOR AF 85-1361) 0 PSI FULL MARK ON AF 85-1361 AND SUBSEQUENT MDS) IF SERVICING IS REQUIRED REFER TO T.O. 1C-130A-2-12JG-10-2				

CARD NO.	WORK AREA(S)	TYPE MECH REQ.	MECH NO.	CARD TIME	PUBLICATION NUMBER	CHANGE NO.
1-050	6R	APG	1	1:14	T.O. 1C-130A-6WC-15 15 MAY 00	1

Figure 3. Work Card 1-050

From this work card, the mechanic has the information to inspect a certain area of the aircraft. During the inspection, if any discrepancies are noted corrective actions are taken or scheduled for later repair. Corrective actions consist of the following:

1. Minor discrepancy and mechanic is qualified to repair - repair immediately
2. Major discrepancy and mechanic is qualified to repair - repair during fix phase of inspection
3. Minor or major discrepancy and mechanic is not qualified to repair - create write up for discrepancy in aircraft forms (AFTO 781A) and notify shift supervisor to contact appropriate mechanic to repair during fix phase

Once the area is inspected, the mechanic moves on to the next work card's inspection area. This scenario is accomplished by all ISO mechanics and is called the "look phase" of the ISO process. Once the aircraft has been inspected, the "fix phase" of the ISO begins. The fix phase involves fixing discrepancies identified in the look phase.

The ISO process consists of a series of tasks to be accomplished in a certain order, and by qualified resources. For example, the aircraft must be washed, depaneled, inspected, and then repaired in that order. The ISO consists of a series of dependent tasks, and project management scheduling techniques can be used to manage it.

Project

A project is a *temporary* endeavor undertaken to create a *unique* product or service (Guide, 2000; 4). Temporary implies that every project has a definite beginning and end. Unique, in this context, means the product or service is different in some distinguishing way from all other products or services. Projects have five major characteristics (Guide, 2000: 4):

1. Projects are performed by people

2. People are from different organizational and functional lines
3. Projects are constrained by limited resources
4. Projects are planned, executed, and controlled
5. Projects have a well-defined objective

Projects are undertaken at all levels of an organization. They can involve one or more individuals and their duration can range from a few weeks to more than 5 years (Guide, 1996: 4). With such a wide range of attributes, new forms of project organization and new practices of management have evolved. Project management is a result of this evolution.

Project Management

Project management in business and industry is defined as managing and directing time, material, personnel, and costs to complete a particular project in an orderly, economical manner; and to meet established objectives in time, dollars, and technical results (Spinner, 1992: 2). Another definition for project management is "the application of knowledge, skills, tools, and techniques to project activities to meet project requirements" (Guide, 2000; 1). Meeting project requirements is the ultimate goal of project management for both definitions. In order to meet project requirements, numerous project management techniques have developed. One such technique is the Critical Path Method (CPM).

Critical Path Method

The Critical Path Method was developed in 1957 by a team of engineers and mathematicians from Du Pont and the Sperry Rand Corporation as a management control

system (Horowitz, 1967: 5). CPM was used successfully at Du Pont for scheduling complicated design, construction, and plant maintenance projects. CPM is one methodical system for planning, scheduling, and controlling a project.

Projects are made up of individual tasks. One way these tasks, and the relationships between them, can be shown is in a graph called a *network*. The network shows the order in which the tasks must be completed; which tasks are sequential and which can be accomplished in parallel.

Figure 4 shows a project in network format with appropriate predecessors laid out. In the network, the nodes represent tasks and the arcs represent sequence dependencies. The project starts with Task A, which must be completed before Tasks B or C can be started. B must be completed before D can start, but D does not need to wait up on C to finish. In order for Task E to start, both Tasks C and D must be finished.

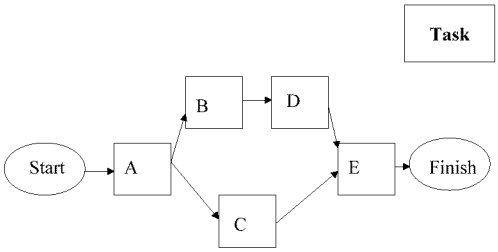

Figure 4. Project Network

There are two circumstances when tasks have to wait for other tasks to finish before they can start. They are technical and resource dependencies (Ozdamar, 1995: 575). Figure 5 details the dependency breakdown. Technical dependency is a situation where one task must be completed before another due to the nature of the tasks themselves. For example, when securing two pieces of metal together the holes must be drilled first; then tapped, then secured with a bolt. In the example above, Task B is

technically dependent on A, meaning that A must be accomplished before B can take place.

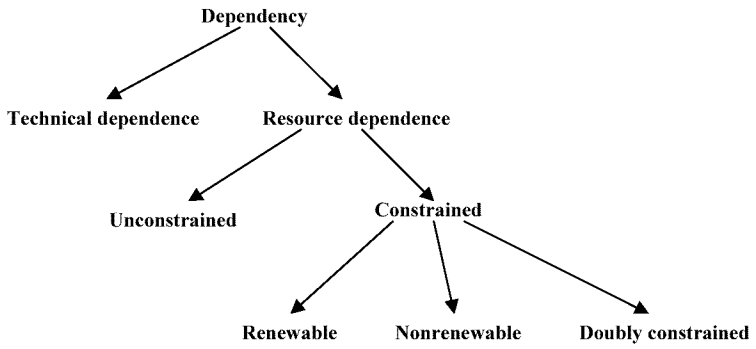

Figure 5. Dependency

The second circumstance is resource dependency. This happens when one resource is needed for two tasks and the tasks cannot be performed at the same time. The resource may be a person or piece of equipment. In Figure 4, as an example, the resource required for B is the same as the resource required for C. B and C cannot be performed at the same time, so either B or C must wait until the other task is completed and the resource is freed. The example resource for tasks B and C would be considered a *constraining resource*.

Resource dependency can be further broken down into unconstrained and constrained resource dependency. An unconstrained resource is one that has sufficient supply for all tasks, thus is available on demand. An unconstrained resource is seldom found in reality. A constrained resource, on the other hand, is available in limited quantities, and is more prevalent in project scheduling. A tremendous amount of research has been accomplished on the resource constrained scheduling problem (Willis, 1985; Christofides, 1987; Bowes, 1995; Ozdamar, 1995).

Constrained resources are further divided into renewable, nonrenewable, and doubly constrained. A renewable constrained resource is constrained on a period-by-period basis. For example, labor is used every day and limited on a daily basis (Ozdamar, 1995: 575). A nonrenewable constrained resource is constrained on a project basis. Materials and budget are examples when their total consumption over the duration of the project is limited (Ozdamar, 1995: 575). A doubly constrained resource is simultaneously constrained on a period and project basis.

Once the tasks and technical dependencies are established, project total duration can be computed. It is important to note that the project's total time is not the sum of all the individual tasks because some operations can be completed in parallel. In fact, a limited number of tasks control the project completion time. These tasks are called *critical operations* and form a path through the network called the *critical path*. Evaluation of these tasks form the basis of the Critical Path Method (Horowitz, 1967: 5).

Critical Path Method (CPM) is the most commonly used project management tool in industry (Newbold, 1998: 54). Many industries use CPM to plan projects such as the installation of tooling, building and designing operations for facilities and machinery, construction projects, administrative programs, and maintenance operations (Spinner, 1992: 3). Its application is so broad as to be useful for any series of actions that, when combined, form a complete program having a start and finish.

CPM determines the start and finish dates for individual activities in a project. A result of this method is the identification of a critical path, or the unbroken series of activities, which determine the start and the end of the project. A delay in the starting or completion time of any critical path activity results in a delay in the overall project

completion time. Because of their importance for completing the project, critical path activities receive top priority in the allocation of resources and managerial effort.

The example previously provided in Figure 4 is shown again in Figure 6. This network is now expanded to include task duration times in Table 1. The following terms used in CPM and this example are defined as:

Duration – length of time to complete the task

ES (Early Start) – earliest possible time that an activity can be started

EF (Early Finish) – earliest possible time that an activity can be completed

LS (Late Start) – latest allowable time that an activity can be started without delaying the completion of the project

LF (Late Finish) – latest allowable time that an activity can be completed without delaying the completion of the project

Predecessor tasks – tasks that need to be completed before another is started

S*uccessor tasks* – tasks that immediately follow a predecessor task

Task – activity being performed

Te – total time for completion of project

Table 1. Activities for Project

Task	Predecessor	Duration (weeks)
A		3
B	A	4
C	A	3
D	B	1
E	C, D	2

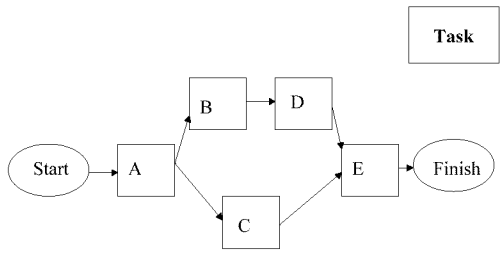

Figure 6. Project Network

Once the task durations are known, the ES/EF and LS/LF times can be calculated for each task. The CPM method calculates ES/EF and LS/LF times in two separate passes through the network, a forward pass to determine ES/EF times and a backward pass to determine LS/LF times. ES times are determined by using the formula $ES = EF_{predecessor}$ (Nicholas, 2001: 208). Task A has no predecessor, so it can start at time 0. EF times are determined by $EF = ES + duration$ (Nicholas, 2001: 208). Task A takes 3 weeks to complete, thus, the EF for Task A is 3. Tasks B and C can start once Task A is completed, so their ES times are 3. This method is followed for each of the remaining tasks, except for Task E. Task E has two predecessor tasks (C and D). Task C's EF is 6, but Task D's EF is 8. In order for Task E to start, Tasks C and D must both be completed, therefore, the earliest Task E can start is when the latter of Tasks C and D finish. Task E's ES is therefore 8. Once the forward pass through the project is completed the entire project time (*Te*) can be determined. Also at this time the project's critical path can be determined. A project's critical path is the longest path through the network from origin node to terminal node (Nicholas, 2001: 205). In this case, the *Te* is 10 weeks and the critical path is ABDE. As stated before, any increase of time on tasks ABDE will increase the time of the entire project. Figure 7 depicts the critical path. Now a backward pass can be completed to determine the LS/LF times for each task.

The finish time of 10 weeks will be used as the starting point to perform a backward pass to determine LS/LF. LF is calculated by $LF = LS_{successor}$ (Nicholas, 2001: 209). The LF for Task E is 10, since it does not have a successor. LS is calculated by $LS = LF - duration$ (Nicholas, 2001: 209). Task E's duration is 2 weeks, so Task E's LS

is 8. The LF for tasks C and D are determined by the LS of Task E. Therefore, Tasks C and D's LF is 8. Task A has two successors. When a task has two or more successors, the successor with the earliest LS will be used to determine the predecessors LF. In this case Task B's LS is 3 compared to Task C's 5. Therefore Task A's LF is 3. The ES/EF and LS/LF times for each task are annotated above their respective tasks in Fig. 7.

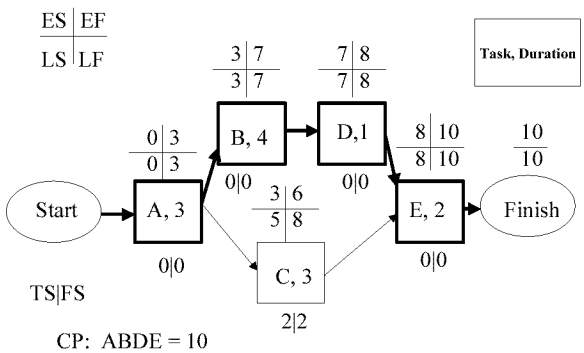

Figure 7. Critical Path

Once the ES/EF and LS/LF times are determined, Total Slack (TS) and Free Slack (FS) can be determined. Total slack (TS) is the difference between LS and ES ($TS = LS - ES$) or LF and EF ($TS = LF - EF$) for an activity. It is the amount of time between when a task *must* take place and *can* take place without affecting the project finish date (Nicholas, 2001: 210). TS is shown under the respective activities in Fig 7. The tasks with 0 total slack are the tasks on the critical path. In the example, they are A, B, D, and E.

Free slack (FS) is the amount of time a task can be delayed without affecting the early start of the activity immediately following. It is computed by the difference between the EF and the earliest ES time of its successor ($FS = ES_{earliestsuccessor} - EF$) (Nicholas, 2001: 211). In the current example only Task C has FS. It can be delayed up

to 2 weeks and will not interfere with the start of Task E. With the above technique the CP is determined, but that is not always enough to complete projects on time and under budget.

Even with modern information and communication technology, most project managers run into problems completing projects on time and within budget, while fulfilling the customer's needs of cost, schedule and performance. These challenges are related more to management in general, than to any issue related to scheduling in particular. The following are two government examples illustrating the difficulty in meeting project goals.

> US Department of Energy: "GAO found that: (1) from 1980 through 1996, DOE conducted 80 projects that it designated as major system acquisitions; (2) DOE has completed 15 of these projects, and most other projects were terminated prior to completion after expenditures of over $10 billion; (3) cost overruns and schedule slippages continue to occur on many of the ongoing projects…(Report GAO/RCED-97-17)
>
> Defense projects: "Despite DOD's past and current efforts to reform the acquisition system, wasteful practices still add billions of dollars to defense acquisition costs. Many new weapon systems cost more and do less than anticipated, and schedules are often delayed." (Report GAO/HR-97-6)

Project management is a mature area of study that has systematic problems similar to those found in industry. As such, a technique used in the private sector to deliver products on time and under cost can be used in public sector project management. One such technique involves the Theory of Constraints.

Theory of Constraints

The Theory of Constraints (TOC) involves an important set of principles of management science developed by Dr. Eliyahu M. Goldratt (Newbold, 1998: xvii). Since the mid-1970's, Goldratt has used scientific methods to create concepts in management

which have proven to be of great value to industry (Newbold, 1998: xvii). These methods have been used in the general and manufacturing management area, manufacturing information technology environment, day-to-day managing skills, and even in project management areas (Newbold, 1998: xvii). Goldratt's first book, *The Goal*, revolutionized manufacturing by describing how TOC could be applied to the factory floor (Cook, 1998: 12). "TOC is a common sense management philosophy where a person must find the constraint of the system and then concentrate effort on elevating the capacity of the constraint" (Cook, 1998: 12). The following is an example of TOC in use.

> The Orman Grubb Company, a small manufacturer of wood furniture, used TOC to evaluate their inventory strategy, ultimately reducing inventory, which lowered overall costs and led to increased sales (20 – 100%) and an improved financial picture (Orman, 2001).

TOC focuses on increasing or optimizing the performance of processes that involve a series of interdependent steps. Instead of breaking the process down into individual steps and then improving the efficiency of each step, TOC focuses the manager's efforts on the bottlenecks, or constraints, that keep the process from improved performance (Elton, 1998: 153). With TOC, the bottlenecks are scheduled to maximize their throughput. Throughput is the rate at which a system generates money through sales of its products or services while adhering to promised completion dates. Application of TOC involves the following steps (Goldratt, 1990: 5 - 6):

1. Identify the system constraints - also at this time the constraints must be prioritized according to their impact on the goal
2. Decide how to exploit the constraints
3. Subordinate everything else to the above decision

4. Elevate the system's constraints

5. If in the previous steps a constraint has been broken, go back to step 1

These steps need to be repeated because constraints can change over time.

For projects, the constraint is represented by the tasks on the critical path. Our example is shown again in Figure 8 with the CP (ABDE) bolded.

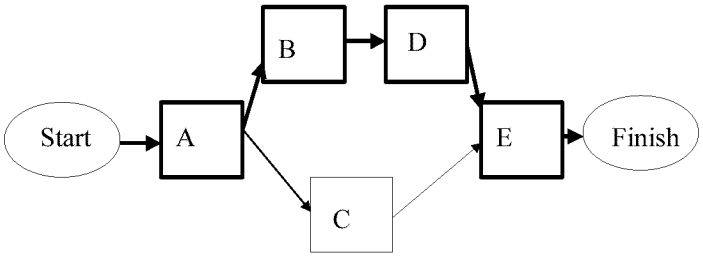

Figure 8. Critical Path

No matter how fast tasks are completed, the project cannot be completed faster than the sum of the processing times of the critical path tasks. Goldratt identified a second constraint to processes that managers often overlook: scarce resources needed by tasks not only on and off the critical path but by other projects (Goldratt, 1997; 85). Previously, scarce resources were considered finite and available at levels below the quantity needed to complete the project in the minimal amount of time (Swartz, 1999: 14). Consider again that the same resource that accomplishes Task B is also required for Task C. If there is only one unit of this resource, it would be unable to perform Task B and C simultaneously as the unconstrained CPM schedule would require. There are a variety of methods and options for how to deal with resource constraints. Once such approach to the scheduling of scarce (constrained) resources in the beginning of CPM is Critical Chain scheduling.

Critical Chain

The Critical Chain (CC) is that set of tasks which determines overall project duration, taking into account both precedence and resource dependencies (Newbold, 1998; 57). It refers to a combination of the critical path and the scarce resources that together constitute the constraints than need to be managed. CC has also been used in project management with outstanding results. Below are two examples.

> Lord Corporation, a developer of vibration and noise control systems for the industrial and aerospace markets used CC scheduling in its Information Services Division. The results were a capacity increase of 60%, cycle time improvement of 100%, two projects completed early, five on-time with no additional resources, and operating costs have remained the same. (Lord, 2001)
>
> Harris Corporation's Mountaintop, PA. semiconductor plant applied CC scheduling in the development of their new wafer fabrication plant. For a project of this size, including the design and erection of the building, installation of equipment, hiring and training of employees, and ramp-up to 90% of designed production rate typically took an average of 54 months. From project kick-off to selling product produced in the new plant, the use of CC reduced the time to 13 months. (Harris, 2001)

Once the constrained resources are determined, the CC tasks can be determined. In our sample project, the CP was ABDE. However, there is only one unit of resource for Tasks B and C. CPM states that B would get the resource first and then C would be accomplished after B was finished. Under CPM, E could start as early as week 8, but due to the constrained resource, C cannot start until week 7 and does not finish until week 10. Therefore, E cannot start until week 10. The project now takes 12 weeks to complete and the CC is ABCE. Figure 9 shows the CC with dummy arcs (bolded dashed lines) inserted to represent how the CC differs from the CP. A major difference between CP and CC is the topic of safety time, which will be discussed next.

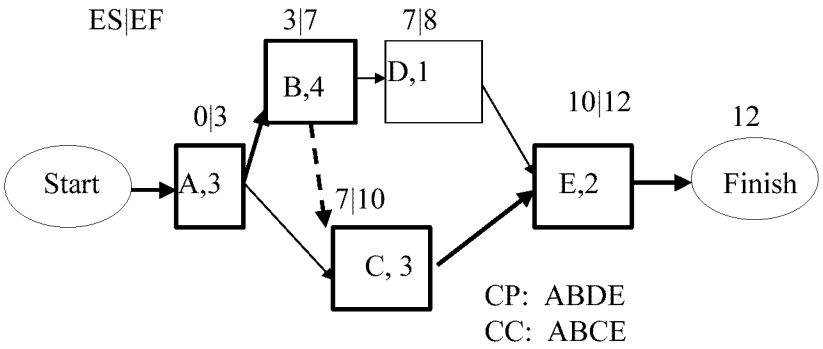

Figure 9. Critical Chain

Safety Time

Most project schedules have implicit safety time built into each task estimate. Individuals will tend to over-estimate the time to complete a task. By adding a "pad" to the task time, the individual tries to ensure that their task will be completed on-time; this added pad time represents protection against the schedule being disrupted by a delay in a single task. This makes the individual look good to management. Second, managers appreciate inflated task times because it gives them maneuvering room when bidding on contracts. Managers know the times are inflated so if a potential customer wants a shorter project duration, the manager assumes that he or she is able to give it to them to increase the chance of winning the contract. Initially, padding individual task times sounds like a good idea, but actually it is not. A problem with leaving padding in each task estimate (Figure 10), is that the safety time is often wasted at the beginning of the task period. One problem is that individuals can become concerned only with their tasks, rather than the overall project because, they view the overall project as management's responsibility. By padding each task, the safety thought to be there is easily wasted. There are three ways in which this safety, or buffer, is typically wasted (Cook, 1998: 14).

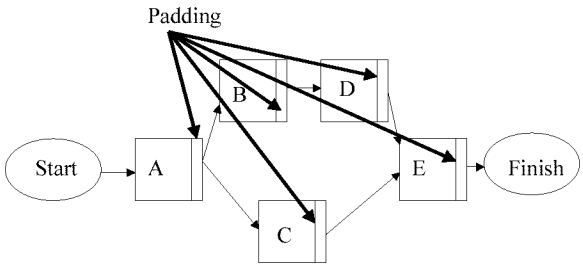

Figure 10. Padding of Individual Tasks

Wasted Safety Time

The first class of wasted safety time is called the *Student Syndrome*. The student syndrome occurs when an individual knows how long it will take to complete an assignment, but does not start the assignment until the last minute. This does not allow the worker any safety time if problems are encountered. The same situation arises in a more general sense for project tasks. Resources make estimates, usually based on past or a similar experience, of how long a task will take to complete and add safety to it in order to be able to finish on time or even early if problems are not encountered. This task duration is given to the boss. After the boss has left, the task is reevaluated and the individual decides on a most likely time. The resource then gets caught up working on other projects with closer deadlines. When only the most likely time is left until the deadline, effort is expended on the task. At that point, if problems are encountered the deadline is missed (Cook, 1998: 14), because the safety provided by the initial padding of the estimate is already lost.

The second way safety time is consumed is *multitasking* (Cook, 1998: 14). Project managers are generally concerned about only their individual projects. Workers responsible for tasks, however, may be assigned multiple tasks for a single project, or

worse yet they may be assigned multiple tasks across multiple projects. The priorities of tasks by workers can change over time. This causes resources to work on one project or task for a short amount of time, then jump to another and so forth. This movement from one task to another increases individual task times, as workers need time to set up and become familiar with the tasks again. This increase in task time has the effect of reducing the safety buffer.

The third and final way in which safety time is wasted has to do with the *schedule's structure* (Cook, 1998: 15). Because tasks can have necessary predecessors or are dependent on shared resources; in many circumstances delays are passed on, while gains may not. There are two cases where this is present: sequential tasks and parallel tasks.

Sequential tasks are those that need to occur in a set order. In Figure 11, F, G, and H are sequential tasks. All three tasks have estimated durations of 30 minutes. The overall sequence should take 90 minutes. Suppose task F is completed on time, 30 minutes have expired. Next task G finishes 10 minutes early, however, the resource needed to complete H is being used elsewhere because it was not scheduled to start on H for another 10 minutes. At the agreed upon time, the resource for H starts on H, but it encounters a problem and finishes the task in 40 minutes. The overall series of tasks took 100 instead of 90 minutes. Why? Because the padding added to each task prevented the gain in G from being carried forward, and allowed the delay in H to be carried forward.

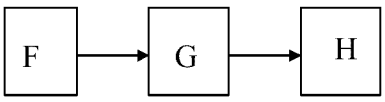

Figure 11. Sequential Tasks

This same situation can arise in parallel tasks. Figure 12 shows the same three tasks, but this time F and G can be completed in parallel, and H is dependent on the completion of both tasks. Each task takes approximately 30 minutes to finish. The resources for each task are scheduled accordingly. This time F is completed 10 minutes early, but G is 10 minutes late. Since H has to wait for both F and G to complete, it is 10 minutes late to start. Task H finally starts and takes 30 minutes to complete. Total project time is 70 minutes instead of 60 minutes. Again gains are not passed on, but delays are.

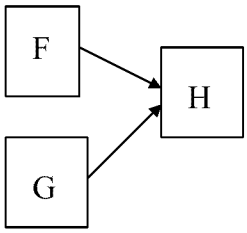

Figure 12. Parallel Tasks

Critical Chain Safety Buffers

In theory, safety time (padding) is added to all tasks to prevent those individual tasks from being late. In practice, padding of this type is consumed by the three phenomena just discussed and does not protect the project as a whole. CC safety buffers, on the other hand, are used to keep the critical chain flowing smoothly. CC buffers are an inclusion of additional time put into a schedule *systematically* in order to protect against unanticapted delays, and take advantage of early starts (Newbold, 1998; 263). There are three specific types of buffers used in CC scheduling: *project, feeding,* and *resource*.

In CC the safety is removed from each task, and is aggregated at the end of the project to become the *project buffer* as can be seen by comparing Figures 13 and 14. In Figure 14, individual task padding has been removed from each task and is grouped together at the end of the project. The project buffer protects project commitment dates from fluctuations on the CC. Theoretically, the date at the end of the project buffer is the only date that remains fixed in a CC schedule (Cook, 1998: 16). "The project buffer becomes a necessary component of the schedule, and must not be considered 'padding'" (Cook, 1998: 16).

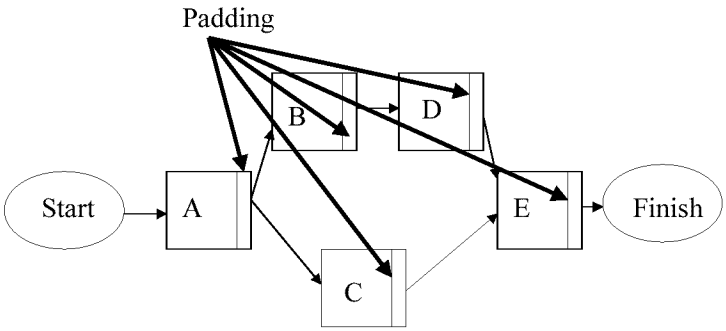

Figure 13. Padding of Individual Tasks

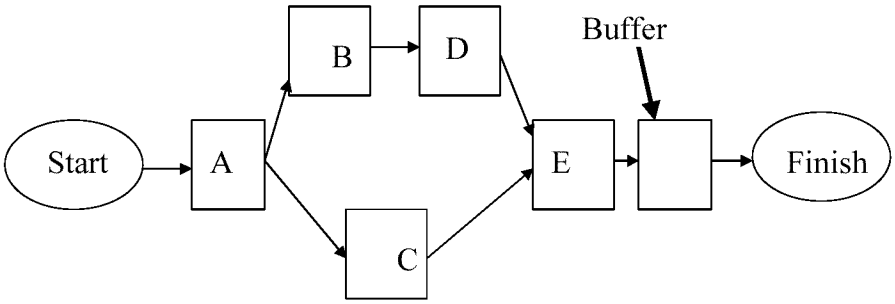

Figure 14. Project Buffer

Buffers can also placed at the intersection of all non-critical paths with the project's critical path. The *feeding buffer* protects the CC from delays in the feeding tasks (non critical chain tasks that connect to the CC), and provides for the possibility for CC tasks to start early. It protects the CC from the variability of non-critical chain tasks (Cook, 1998: 16). Figure 15 provides an example of a feeding buffer. In effect, the feeding path is given its own safety so that if delays are encountered, unless the entire feeder buffer is "eaten," the delays will not be passed on to the rest of the schedule.

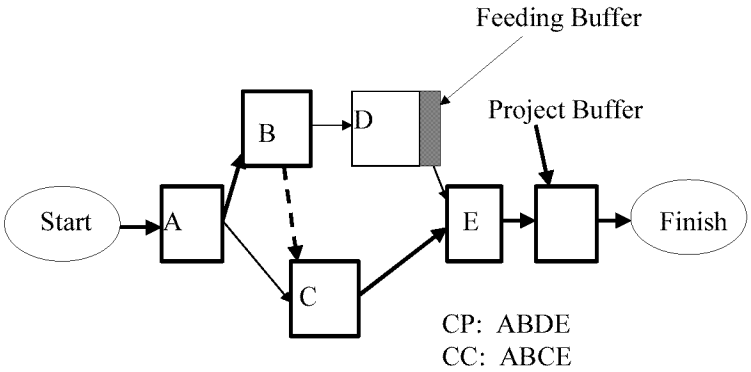

Figure 15. Feeding Buffer

The final buffer in CC scheduling is the *resource buffer*. The resource buffer is provided before resources start work on CC tasks and to ensure that the resource is available for CC tasks to start on time or early if possible (Newbold, 1998: 267). Figure 16 illustrates a resource buffer. A, B, C, E are CC tasks. Any resources needed to complete these tasks would be scheduled to be ready ahead of scheduled need. The resource buffer ensures that the resource is available for D to start on time. It also provides that if one CC task finishes early, the resource is available to start on the next task early. This allows for early starts of tasks not provided by the CPM.

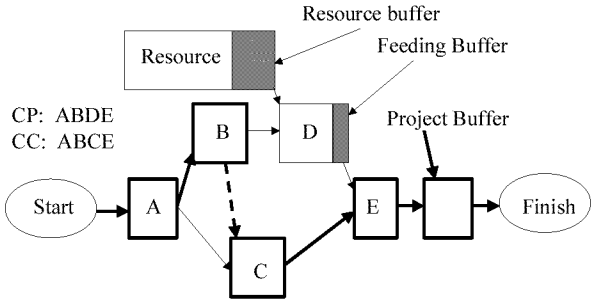

Figure 16. Resource Buffer

Figure 17 shows the sample project with a CC schedule. Note that average task times are used as duration times, not estimated times. The safety has been removed and is added together at the end of the schedule. The critical path task D duration time has been reduced and a feeding buffer has been added to ensure it is complete in order for E to start on time. The entire project duration is 11 days but there are 5 days of project buffer to ensure the project finishes on time. This aggregation of buffers is the most powerful aspect of CC, "Because of random number aggregation theory, the overall variance of the CC will be much less than the addition of all the individual variances for each task." (Cook, 1998: 17). In other words, the amount of protection necessary when you aggregate all of the tasks is much less than if you added the protection originally built into each estimate. This is analogous to the *Portfolio Effect* in inventory management.

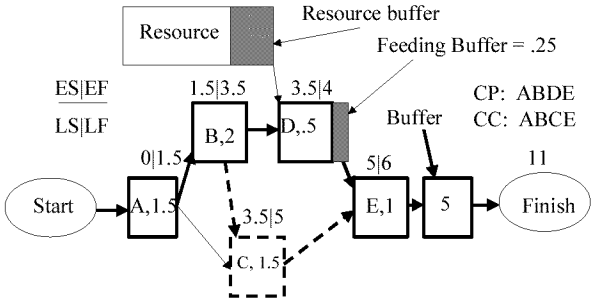

Figure 17. Critical Chain Schedule

The portfolio effect states that a reduction in safety stock can be achieved if safety stocks are aggregated and consolidated into one location (Zinn, 1989: 3). For example, consider five auto part stores belonging to the same company in a certain area, with each one having a safety stock level of five for a certain type of car floor mat. This would result in an aggregate safety stock level of 25 floor mats. Without going into the calculations of the portfolio effect, it states that the floor mats could be aggregated at one central location for the five stores and the total aggregate level could be reduced to 14 and still have the same stock out protection as if each store had five, while resulting in a reduction and savings to the company. This same situation arises with the aggregation of the buffers. By aggregating them, the total buffer amount can be reduced to an amount less than the total cumulative value for the tasks they are protecting.

Determination of Buffer Size (Newbold, 2001: 93)

The most important buffer is the project buffer, because it protects the project completion date. "The project buffer length should be based primarily on the cumulative risk along the CC, since it is mainly protecting the customer from CC fluctuations." The buffers are the aggregate of the risk encountered along the chain of events feeding them. "A good rule of thumb used to determine buffer size is to start with 50% of the unpadded CC duration for the project buffer." In our sample project, the CC duration is 10 weeks so a project buffer of 5 weeks would be added.

The feeding buffers are needed to make sure that the tasks on which the CC depends will be ready in time. They provide a chance for early starts, if the CC tasks are ahead of schedule. A buffer size of half the padding saved in the path leading to the feeding buffer is recommended as a starting estimate.

Resource buffers are strictly "wakeup calls". The resources can be notified and made ready at appropriate times before they are needed, based on how the CC schedule is going. If the CC tasks are experiencing delays, the resource allocation can be postponed. If the CC tasks are being accomplished faster than scheduled, the resource allocation can be advanced.

Management Use of Buffers

The aggregation of buffers allows individuals to take advantage of early finishes and deal effectively with late finishes. Most project managers worry that a dynamic schedule will become unmanageable, and thus opt for the "simpler" approach of trying to lock down the schedule by assigning due dates. The Critical Chain schedule does not become unmanageable because only the Critical Chain tasks must remain buffered. Unless there are major variances to the schedule, feeder paths remain set.

The last major distinction of CC is the way in which the schedule is managed. The resource buffers allow a project team to remain aware of the status of the CC. These buffers are a form of communication between the schedule keeper and the rest of the team (Cook, 1998: 18). The schedule keeper will get task updates from all resources currently working on tasks as the schedule progresses. The resources merely need to report how many workdays remain until their task is complete. When a predecessor CC resource reports to have 5 days remaining, the schedule keeper informs the successor they have approximately 5 days until they are on the CC (Cook, 1998: 18). This is a dynamic countdown for the successor. If the predecessor reported 2 days later that he or she hit a glitch and still had 5 days remaining, this would be passed on to the successor. This

allows CC resources to plan their work schedules and keep other project managers aware of their pending CC status.

Management controls the project by monitoring the status of the buffers (Cook, 1998: 18). This allows them to highlight the tasks that need immediate attention. A typical project will have numerous feeder buffers. The feeder buffer is protecting the feeder path with the highest probability of delaying the CC. Thus, management can focus attention on the feeder paths with the most depleted buffers. Of course, the CC tasks themselves by definition are always considered crucial.

The buffers help management to act proactively. Buffer management highlights potential problems much earlier than they would ordinarily be discovered using typical project management techniques.

The buffers are divided into three equal parts (Act, Watch and Plan, OK). Initially, the full buffer time is available. As delays occur, the buffer is depleted. Time is removed from the end (OK) to the beginning (Act) regions. In the "OK" zone management does nothing. This prevents micromanaging and over adjustment. When the buffer has been depleted into the "Watch and Plan" zone, management would devise a plan to be put into action if further buffer is eroded. In the "Act" zone, the plan previously devised is implemented. Management must understand that the buffer will be eaten as the team advances through the project and runs into unexpected problems. The buffers need to be allocated relative to how much CC is left in the project. If a project has 9 months left to complete with only 2 weeks of Project Buffer remaining, there is a very high probability the due date will be missed. On the other hand, if a project has 2 weeks left of CC, and the same 2 weeks of buffer, management will most likely not be

very concerned. Management monitors the buffers relative to how much CC or feeder branch remains, and the rate of buffer consumption (Cook, 1998: 19).

As has just been described, CC scheduling differs from traditional CPM in a number of ways (Newbold, 1998: 98). Table 2 provides the results.

Table 2. CPM vs. CC

	Critical Path	Critical Chain
Task Duration	All tasks have padded task times	Padding removed from individual tasks and added together at key points
Slack	Throughout whole schedule	Applied at key points in the schedule
Task start times	Usually from the ES time	Usually LS without risking project completion
Task dependency	Precedence considered first	Precedence and resource dependency taken into account up front

These differences lead to the following benefits (Newbold, 1998: 98)

1. Project lead times are cut significantly, by pooling the "slack" into strategically placed buffers.
2. Project completion dates are secure.
3. The need to reschedule is minimized.
4. Task priorities are clear.

Now that CC scheduling has been discussed in detail, the two main areas of implementation will be discussed next.

Single verses Multi-Project Implementation

There are two main categories of CC implementation. The first is called *single project implementation* (Cook, 1998: 19). Single project implementation is applied when projects do not share the same resources. Within an organization, there can be numerous,

single CC projects. As long as each project is assigned its own resources, independent from all other projects, it can be managed as an independent project.

The second category is called *multi-project implementation*. Multi-project implementation applies when there is multiple simultaneous projects and resources are shared across projects (Cook, 1998: 20). It is more difficult to schedule resources across multiple projects because there is no clear decision method when deciding which project to give priority when allocating a constrained resource.

This thesis will concern itself with single project management because that closely describes the environment of the ISO aircraft inspection. The individuals (resources) assigned to the ISO act exclusively on the ISO projects.

Critical Chain and the ISO Process

The SOF-130 ISO process is a project management problem, set in a maintenance environment. The project has a definite start and end date, and there are a limited number of ISO mechanics (resources) assigned to the project from different organizations. There is a clear objective to provide a fully mission capable aircraft to the flight line. With these project characteristics, project management techniques can be used to optimize the scheduling of resources to improve the process. The goal would be to complete the inspection in no more than the currently allotted 9 days, and sooner if possible. Identification of the CC would give maintenance supervision the ability to monitor tasks that could delay the completion of the ISO and also allow them to adjust resources to meet the completion date. By identifying the CC, supervision would be able to identify those critical tasks and determine where future improvements can be made.

Current Implementation

Two current applications of Critical Path theory in maintenance are the Periodic Depot Maintenance Scheduling System (PDMSS) and the allocation of resources during C-5 depot maintenance.

The C-130 depot at Warner Robins Air Force Base uses PDMSS. This system is maintained and updated by personnel under government contract with the Robbins Gioia Company. PDMSS is a visual scheduling tool that shows the current status of an aircraft moving through depot maintenance. When an aircraft enters the depot process, all tasks required for that aircraft during the depot maintenance process are input into PDMSS. PDMSS flows out the tasks in a Gantt type chart. As maintenance personnel accomplish the tasks, the PDMSS is updated with completed tasks. PDMSS then compares scheduled completion of tasks with actual completion of tasks. The output is a horizontal bar chart identifying if an aircraft is behind or ahead of schedule by different colored horizontal bars. The horizontal bars represent the tasks to be performed during the depot and the length of the task. Green bars identify ahead or on schedule while red denotes behind schedule. It also illustrates the amount of time the aircraft is ahead or behind schedule. However, at the time of this thesis, there are problems with PDMSS. One problem relates to how it determines the status of the aircraft. An incomplete 5-minute subtask of a 150-hour task, will show the aircraft being 150 hours behind schedule, instead of 5 minutes. Another problem is resource allocation. PDMSS currently does not provide supervisors with a method to show how resources affect the aircraft schedule. Robbins Gioia personnel are currently working on these two problems with a hope of corrections in the future.

Another well-known application of Critical Path theory is in use at the C-5 depot, also at Warner Robins AFB. Over a period of 5 years, the C-5 depot repair has extended from the 200 - 250 day range to over 300 days. The increase in time was due to an increase in extensive engine pylon repairs and deterioration of the aft tie box fitting on the horizontal stabilizer. Maintenance personnel determined these tasks were along the CP and looked at ways to shorten their duration. Technology and industrial support workers stepped in to manufacture new parts before the aircraft arrived, which allowed the replacement of defective parts in record time. The last two C-5A-models were completed in 286 days, and the last C-5B-model was completed in 191 days. In this example, Critical Path identification of the engine pylon and aft tie box repair tasks and their resulting improvements led to a decrease in depot time of the C-5 aircraft.

Summary

This chapter presented the importance of the ISO process to aircraft airworthiness. The ISO process was described, including the 4 different phases (3 minor and 1 major inspections), which make up a complete inspection cycle. The ISO consists of a complex set of tasks, completed either in parallel or sequentially. The ISO has a definite start and end with technicians from different organizations completing the inspections, and finally there is a clear ISO objective: to complete a set of tasks, resulting in a fully mission capable aircraft, in a minimal amount of time. These aspects of the ISO are also characteristics of projects. As such, project management techniques appear to be suitable to the ISO environment.

One such project management technique is the Critical Path Method developed by Du Pont in 1958. CPM determines which sequential tasks take the longest amount of

time and focuses management attention on those tasks. However, the CPM assumption of unconstrained resources does not hold and is unrealistic in practice.

Goldratt's Critical Chain view of the resource constrained project scheduling problem points out that not only should managers consider the critical tasks, they need to take resource contention into account "up front" when determining the critical path, and schedule them correctly. This resulted in the Critical Chain method.

In the next chapter, the ISO process's CP and CC will be developed. Once the critical chain is identified, a CC scheduling package will be applied to the ISO to determine if improvements to the critical chain can be accomplished. The CP and CC versions of the process will be compared and the results presented in Chapter 4. The last chapter will summarize the research results and explore the managerial implications of the findings.

III. Methodology

Introduction

The purpose of this chapter is to discuss the framework for the analysis conducted in this research effort. The methods used in this study and their relevance will be provided, setting the stage for the presentation of the results. First, the sources of the data and the methods of retrieval used will be introduced. The parameters of the analysis will be discussed next, followed by a description of the variables (resources and work schedules). Calculations of task durations using the Beta distribution will follow, which will lead into a discussion of Microsoft Project 2000© as the model driver with the resulting three different models. A description of the CP and CC project duration estimations will follow. The chapter ends with a discussion of total project duration time (*Te*) as the measure of performance and the experimental manipulations.

Data Collection

Data was collected for this study by reviewing the 1C-130A-6WC-15 work cards, and by interviewing the following individuals from the 16th Equipment Maintenance Squadron Isochronal inspection section: dock chief, shift supervisors, floor chiefs, and wing chiefs.

The dock chief is in charge of the entire ISO process, including all personnel, equipment and materials used in the ISO. The dock chief is the single point of contact for ISO related issues. The shift supervisors support the dock chief, and control the maintenance, equipment, and personnel on their respective work shifts. The ISO runs a two-shift operation with an additional weekend duty crew; therefore, there are three shift

supervisors. The floor chiefs report to the shift supervisors and are primarily responsible for maintenance on the aircraft. The wing chief, sometimes called the area chief, is in charge of maintenance on a certain section of the aircraft, such as the left or right wing, nose section, or tail section.

The interviews were conducted primarily to validate the WC information. They consisted of a short explanation of the research area, followed by a listing of what information was required. The following information was requested:

1. A listing of tasks accomplished during the ISO in order of occurrence.
2. Type of mechanic required for each task along with the number required.
3. The number of mechanic's available during each day of the ISO.
4. Task start points.
5. Task duration.
6. Required task predecessors.

Appendix A shows the results of the data collection provided by the dock chief. The tasks were categorized by which tasks were currently accomplished each day of the ISO and by each AFSC. This aggregation of the work cards tasks for the ISO process by AFSC and date, according to the dock chief, is the easiest for a description the ISO process.

The dock chief, shift supervisor, floor chief and wing chief determined scheduled task durations. The durations are the aggregated amount of time that one maintenance person accomplishes work in their AFSC on the ISO aircraft during the duty day. Additionally, the resource column of the task depicts which maintenance personnel is performing the task and how many workers of that kind are required to perform that task

in the time allotted in the duration column. For example, using the data provided in Table 3, nine ISO APG (dayshift) personnel are required to (inspect) and lubricate the aircraft. The task should take 8 hours with nine individuals working on the task. The nine personnel required are denoted by the 900% in the resources block.

Table 3. WBS Information

WBS	Task	Duration	Resources
4.1	Look/Lube phase (APG dayshift)	8 hrs	ISO APG (dayshift)[900%]

Activity Parameters

The activity parameters for this study include the type of work tasks performed during the ISO, along with their associated maintenance personnel required, task duration and task predecessors. The work performed is shown in the task column of the work breakdown structure (WBS) in Appendix B. The WBS includes the task, duration, resources and predecessors. This information is required for programming critical path or critical chain problems.

The last parameter is the task predecessor. As stated in Chapter 2, certain tasks have predecessors that must be accomplished before they can take place. The ISO tasks are the same. The dock chief provided the predecessor alignment of tasks. Some of the predecessor tasks are apparent, such as “Tow aircraft to ISO hangar, Task 2.3”, before “Jack aircraft, Task 3.1” can be accomplished. Other predecessor arrangements are not as apparent, such as “Engine performance runs, Task 9.1” must be completed before “Fuel cell fix phase, Task 9.2” can be started. There are also extenuating circumstances where the predecessor arrangement can change. For example, if, in the previous example, a fuel cell discrepancy is a safety problem and the aircraft engines cannot be

started until the fuel cell problem is corrected, then the task dependency would change. For the purpose of this study, the general task predecessor-successor relationships were used. The general relationship was determined by the experience and knowledge of the ISO maintenance technicians, which cannot be over emphasized.

Description of Variables

There are two types of variables: independent and dependent. Independent variables cause, influence, or affect outcomes, while dependent variables, as the name implies, are dependent on the independent variables; they are the outcomes or results of the influence of the independent variables (Creswell, 1994: 63).

The independent variables for this study are the resources (maintenance personnel) involved in the ISO process. There are a total of 11 different types of maintenance personnel and 1 government contract crew (aircraft wash) involved in the ISO process. Appendix C lists each type of maintenance person, with their associated Air Force Specialty Code (AFSC), authorized manning level, and current manning levels. Each AFSC is required in different amounts and at different times during the ISO. Certain AFSCs are broken down further by their duty schedule, (such as personnel who work on the weekends); known as weekend duty personnel, or by their duty location (such as flight line or ISO) APG.

The other independent variable used in this study is the work schedule. The work schedule is the work time for the maintenance personnel involved in the ISO. The work schedule is broken down into two further areas: shift hours and days off. Shift hours are the working time of the ISO maintenance personnel for any workday. Days off are the

non working days of the maintenance personnel according to which shift they work. Table 4 shows the shifts and corresponding working hours and days of the week.

Table 4. Shift Hours

Shift	Working hours	Working days of the week
Days	0700 - 1600	Monday - Friday
Swings	1600 - 0030	Monday - Friday (ends 0030 Saturday morning)
Nights	2300 - 0730	Monday - Friday (ends 0730 Saturday morning)
Weekend duty	0700 - 1900 0700 - 1800	Saturday -Sunday (if work another shift) or Thursday - Monday

The independent variable work schedule will be manipulated during the research to determine if improvements can be made to the existing schedule.

Calculations of Probabilistic Task Durations

Task durations given by the ISO dock chief were considered to be 90 percent completion times for each task. As stated in Chapter 2, the task times given by most people are 90 percent completion times. This means that 90 percent of the time the task will be completed in the time given. Maintenance task times for many systems don't fit within the normal distribution (Blanchard, 1986: 40). A log normal distribution usually is used to represent these tasks. The log normal distribution does not have an upper bound, which results in an infinite tail to the right. A beta distribution with shape parameters alpha (α =1.5) and beta (β = 3) resembles the lognormal distribution with an added benefit of finite end points. In order to use the beta distribution, two additional parameters had to be set, the minimum and maximum values of the distribution labeled A and B respectively. The standard beta distribution uses the values A = 0 and B = 1

(Devore, 2000: 183). These four values resulted in the following standard Beta distribution (1.5, 3, 0,1) Figure 18.

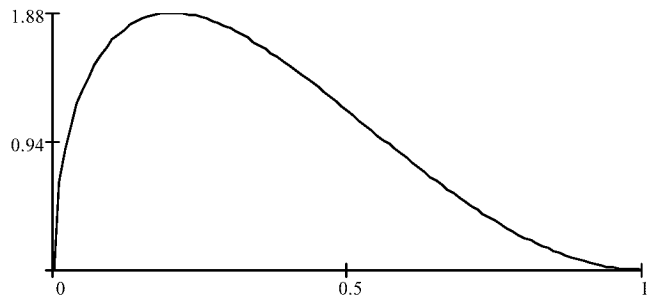

Figure 18. Standard Beta Distribution

Using the standard beta distribution with $\alpha = 1.5$ and $\beta = 3$, Mathcad's *pbeta (x,s1,s2)* (s1 = α, s2 = β) function was used to calculate the *x* value which results in a 90 percent cumulative probability. Cumulative probability distribution gives the probability that a random variable (x) will take on a value *less than or equal to* a specified value. These are obtained by simply integrating (or summing when appropriate) the corresponding probability density over an appropriate range (Mathcad, 1999: 164). In this case, when x = .62 of the standard Beta (Range 0 – 1) a 90 percent cumulative probability was returned. Once x = .62 value was determined, new A and B values could be calculated for each of the different task times. Of the 75 different tasks, 13 different durations were used. Using the 13 basic task durations, the stochastic $\beta(1.5, 3)$ distribution was derived as follows. First, since the A and B values are the upper and lower limits of the beta distribution, an arbitrary determination was made that the spread between the A and B values would be 50 percent of the original task duration for each

task. The 50 percent was used to ensure that a relative spread distance resulted for each of the task durations. This resulted in 13 different beta distributions. The following formula and derivatives were used to calculate the A and B values.

$$Duration = A + .62 * (B - A) \quad (1)$$

As stated earlier the spread between A and B was set at 50 percent of the duration

$$B - A = .5 * Duration \quad (2)$$

By substituting equation 2 into equation 1 for (B-A) results in

$$Duration = A + .62 * (.5 * Duration) \quad (3)$$

solving for A

$$A = Duration - (.62 * .5 * Duration) \quad (4)$$

which simplifies to

$$A = .69 * Duration \quad (5)$$

When equation 5 is substituted back into equation 2 for A

$$B = 1.19 * Duration \quad (6)$$

Using these formulas the following A and B values were calculated for the above durations to be used in the random task generation times. Table 5 provides the 13 task durations with their respective Beta A and B values. Once the A and B values were determined for each of the 13 different task durations, the BETAINV (RAND(), α, β, A, B) function in Microsoft Excel© was used to generate random task durations. The 75 tasks in the project network are associated with one aircraft going through the ISO process. The BETAINV function was used to randomly generate simulated task durations. 100 such aircraft were simulated with the BETAINV function. The results of the 100 simulated ISO task times are shown in Appendix D. Once the 100 aircraft were

simulated, the task durations for each aircraft were input into Microsoft Project 2000© to determine how long the simulated aircraft were in the ISO process.

Table 5. Beta A and B Values

Durations (hours)	A value	B value
0.75	0.52	0.89
1.00	0.69	1.19
1.5	1.04	1.79
2.00	1.38	2.38
3.00	2.07	3.57
4.00	2.76	4.76
6.00	4.14	7.14
7.00	4.83	8.33
7.5	5.18	8.93
8.00	5.52	9.52
12.00	8.28	14.28
16.00	11.04	19.04
21.00	14.49	24.99

Microsoft Project 2000©

The first step in programming the model is to input the tasks under each day of the ISO. For example, Day 1 of the ISO will be the main task, with all tasks accomplished during that day as subtasks. This procedure was completed for each day of the ISO process. Once the task was loaded into Microsoft Project 2000© (MSP2000), the task duration and predecessors were then loaded. Finally, the resources for each task were input.

The matching of resources to tasks is a three-step process. First, the resources (maintenance personnel) need to be added with their respective, current manning levels. Once this was accomplished their individual work schedules could be added. The work schedule is the time during the day each resource is available to perform work. Finally,

the resource is added to the task with the numbers required to perform that task in the allotted time (duration).

The original task durations provided by the ISO dock chief were used to set the baseline model for the experiment. Appendix B shows the initial Microsoft Project 2000© scenario Model (M1). M1 reflects the current ISO process with one exception. All work for each day of the ISO is continuous. This is different than what the dock chief provided. For example, the dock chief stated that 8 hours of ISO APG work is conducted on dayshift and 8 hours conducted on swing shift resulting in 16 hours of work conducted in a 24-hour period by ISO APG. The ISO APG are scheduled to work 9 hours on days and swings. This results in 18 hours of work availability. For the M1 model, this work availability is nullified by the not earlier than (NET) restriction put on tasks. Even though ISO APG tasks are completed before the shift ends new work is restricted from starting until the next day.

Model 2 (M2) was developed with the NET constraints removed. Therefore tasks could be started as soon as resources were available to accomplish the tasks. The only constraints in M2 are the availability of the resources.

Model 3 (M3) was developed as an ideal model in which all constraints are removed. Resources are available 24 hours a day, 7 days a week. Tasks are started as soon as preceding tasks are accomplished.

Once the three models were built, Microsoft Project 2000© was used to calculate the project duration and identify the critical tasks for each model.

In order to determine a difference between CP and CC scheduling, ProChain Version 5.0© was used to calculate the critical chain project duration for the above three

models. The Critical Chain versions took the original task durations and reduced them 50 percent. Following standard Critical Chain procedures, the CC was then calculated and a project buffer that was 50 percent of the project duration was inserted. The project buffer was placed at the end of the critical chain tasks to protect the project. Each of the feeding tasks had a feeding buffer inserted which was 50 percent of the length of the feeding tasks it was protecting. A 2-hour resource buffer was added for each of the resources currently not in use.

With this procedure, CC estimated durations for the three models were obtained. The estimations along with the CP estimations for the models were compared against the 100 simulated durations to determine benefits or drawbacks from using CP and CC scheduling.

Measures of Performance

The primary measure of performance for this research is total project duration (*Te*). *Te* is measured in hours. A 24-hour clock will be used. *Te* is measured from the first hour/date of the ISO (ISO start) to the time/date when all required ISO maintenance is complete (ISO end). For example, if ISO start was at 0700 on Friday, 9 November 2001 and all ISO maintenance is complete (ISO end) at 2400 on Saturday, 17 November 2001, then *Te* equals 209 hours. *Te* will be affected by No Earlier Than (NET) task start constraint and the work schedule of personnel. By removing NET and or increasing or decreasing the shift schedule of workers, *Te* should change.

Experimental Manipulation

This study will identify the impact of ISO scheduling using the CP and the CC method by comparing the 100 simulated ISO durations (*Te*) in each of the models to the estimated duration times provided by the CP and CC scheduling techniques for the respective models. The results will be viewed in the areas of *aircraft availability lost* (aircraft available for use, but not scheduled because ISO was completed before scheduled time) and *aircraft scheduling lost* (aircraft was scheduled to be ready and it was not). Table 6 provides visual representation of the experimental design.

Table 6. Experimental Design

	Models *Te*		
Scheduling Technique Estimated *Te*:	**M1**	**M2**	**M3**
Critical Path	X	X	X
Critical Chain	X	X	X

Conclusion

In this chapter, the methods used in this study were described. First, the sources of the data used and the methods of retrieval employed were introduced. The parameters of the analysis were discussed, followed by a description of the variables (resources and work schedules). Calculations of task durations using the Beta distribution were described, which led into a discussion of Microsoft Project 2000© as the model driver with the resulting three different models. The CP and CC estimations for project duration followed. Finally, total project duration time (*Te*) as the measure of performance was discussed. The chapter ended with a discussion of the experimental manipulation. Chapter 4 will present the experimental results.

IV. Results

Introduction

In this chapter, the ISO project durations resulting from the 100 simulation runs are presented. The three models' results are presented next, followed by the Friedman test to show that a statistical difference among the means was achieved. The estimated durations derived from the CP and CC schedules follows. These durations are used to show the difference between their values and the simulated values. A discussion of aircraft availability lost and aircraft scheduling lost is also shown. The chapter ends by revisiting the investigative and research questions.

Critical Path and Critical Chain Estimations

The results of the deterministic CP and CC estimates for the three constraint sets using the initial task values are shown in Table 7. Models CP1/CC1 reflect the current ISO schedule with No Earlier Than (NET) task times and shift schedules as constraints for the Critical Path (CP) and Critical Chain (CC) schedules. CP2/CC2 removes the NET constraint. CP3/CC3 remove all constraints.

Table 7. Critical Path and Critical Chain ISO Durations (Estimated)

	Models		
Durations (hours)	**CP1**	**CP2**	**CP3**
CP	212.00	168.00	109.27
	CC1	**CC2**	**CC3**
CC Upper estimate	237.00	156.87	95.22
CC Project buffer	33.00	45.00	27.00
CC Lower estimate	204.00	111.87	68.22

Simulation Results

Aircraft moving through the ISO process were simulated 100 times in a spreadsheet. The individual task durations simulated are shown in Appendix D. The simulated task duration values were input into the Microsoft Project 2000© models M1, M2, and M3. The ISO "simulated" durations were then recorded for further evaluation. The results for M1 - M3 are shown in Appendix E. It should be noted that the amount of work accomplished in all models is the same. This verifies that the same amount of work is being accomplished in each model.

After the 100 durations were calculated for each of the three "actual" models, an analysis of the means was conducted to determine if the means were different among the models. Additionally, the distributions were tested for normality. Testing indicated poor support for normality. Figure 19 presents graphic depiction of the model means.

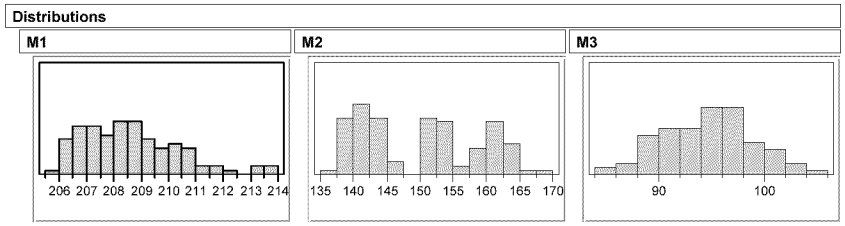

Figure 19. Model Distributions

The statistical package, JMP© 4.0, was used to check for normality. The Shapiro-Wilk W test was used to check the goodness of fit of the data to the normal distribution. A high *p-value*, .75 or higher, would indicate that the data fits the normal distribution. Table 8 presents the results of the Shapiro-Wilk W test. All three models' *p-value* are less than .75, indicating non-normality. A full graphic representation of the goodness of fit test is provided in Appendix F. Since non-parametric data appeared to be

present and a statistical verification of the difference of means was required, the Friedman test was conducted.

Table 8. Shapiro-Wilk W Test for Normality

	Models		
	M1	**M2**	**M3**
p-value	.0001	<.0001	.6609

Friedman *Fr* Test

To show a statistical difference in means between the different models, the Friedman (*Fr*) test was used. The *Fr* test compares *p* probability distributions when the normality and equal variance cannot be assumed (McClave, 1988: 973). The following assumptions are made in order to use the *Fr* test:

1. The treatments are randomly assigned to experimental units within blocks.
2. Either the number of blocks (*b*) or the number of treatments (*p*) should exceed 5 for the chi-squared (χ^2) approximation to be adequate.
3. The *p* probability distributions from which the samples within each block are drawn are continuous.

The hypotheses for the *Fr* test are:

- Ho: The probability distributions for the *p* treatments are identical.
- Ha: At least two of the probability distributions differ in location.

The test statistic is:

$$Fr = \frac{12}{bp(p+1)} \sum_{j=1}^{p} R_j^2 - 3b(p+1) \qquad (7)$$

where

b = Number of blocks
p = Number of treatments
R_j = Rank sum of the jth treatments, where the rank of each measurement is computed relative to its position within its own block

The *Fr* value is then compared to the rejection region of the Friedman test. Rejection region refers to the values of the test statistic for which we will reject the null hypothesis (McClave, 2001: 342). For the Friedman test, the chi squared (χ^2) distribution provides the best probability distribution for describing this region subject to an α value and $p - 1$ degrees of freedom. This results in the rejection region $Fr > \chi^2{}_{\alpha}(p-1)$ degrees of freedom. Where *Fr* is greater than the χ^2 cumulative value, Ho is rejected.

Friedman *Fr* Test Results

Figure 20 visually shows the difference between the durations of M1, M2, and M3. The Friedman test was used to verify the difference in means. A 99% confidence level was used ($\alpha = .01$). The test statistic was $Fr = 200$, while the $\chi^2{}_{.01} = 10.5966$ (McClave, 1988: 1208). The value of the test statistic is greater than the critical value at $\alpha = .01$, therefore Ho is rejected. We can conclude that the means are statistically different.

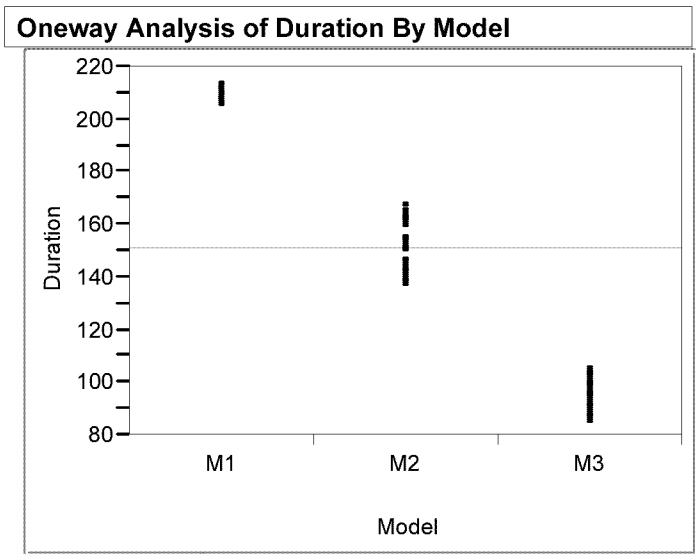

Figure 20. Model Means

Model Durations

The 100 simulated ISO durations were ranked in ascending order for each model (Appendix H). A minimum, mean, and maximum duration was recorded for each. These durations were compared to the estimated durations obtained from the CP and CC models. Table 9 provides an overview of the results.

Table 9. Model Duration Comparison

	Models		
Durations (hours)	**M1**	**M2**	**M3**
Min	205.67	137.13	84.78
Mean	208.65	149.93	94.64
Max	213.69	167.80	104.95
CP estimate	212.00	168.00	109.27
CC lower estimate	204.00	111.87	68.22
CC upper estimate	237.00	156.87	95.22

Aircraft Availability and Scheduling Error

The two scheduling methods were also compared on the basis of *completion time percentile*, *aircraft availability lost*, and *aircraft scheduling lost*. *Completion time percentile* is the percentile of times that the estimated duration falls in the range of the ranked ordered simulated times for that model. *Aircraft availability lost* is the amount of time that an aircraft could have been used for mission accomplishment, but was not used because it was not planned to be ready. *Aircraft scheduling lost* occurs when an aircraft is scheduled to be ready and it is not. Each of the three measures will be described in detail below.

Before proceeding with an examination of the data, an explanation of how the *completion time percentile* was calculated is required. The estimated duration for a particular model (CP1/CC1, CP2/CC2, CP3/CC3) was compared to the ascending rank

order duration time of the simulated 100 aircraft "actual" durations for that model (M1, M2, M3). The placement of the CP/CC duration estimate in that order determined the percentile. Appendix H shows the placement of each CP/CC's estimate.

The calculation of *aircraft availability lost* and *aircraft scheduling lost* also needs to be addressed. The estimated duration for a particular model is subtracted from the simulated duration time from that model. *Aircraft availability lost* will be discussed first. If the estimated model completion time is greater than the simulated duration time, a negative number results. For example, if estimated completion time is 200 hours, and simulated duration time is 190 hours, then aircraft availability time is 190 – 200 = -10. The -10 signifies that the aircraft was available for 10 hours, but was not used because it was not planned to be ready. A*ircraft scheduling lost*, on the other hand, occurs when the estimated model completion time is less than the simulated duration time a positive number results. This signifies that the aircraft was scheduled to be ready and it was not. Figure 21 presents a graphic representation of the *aircraft availability lost* and *aircraft scheduling lost.* The distribution of times for a model results in the *aircraft availability lost*, versus *aircraft scheduling lost* values for that model. Appendix I contains the CP1 - CP3 and Appendix J contains the CC1 – CC3 results of these calculations.

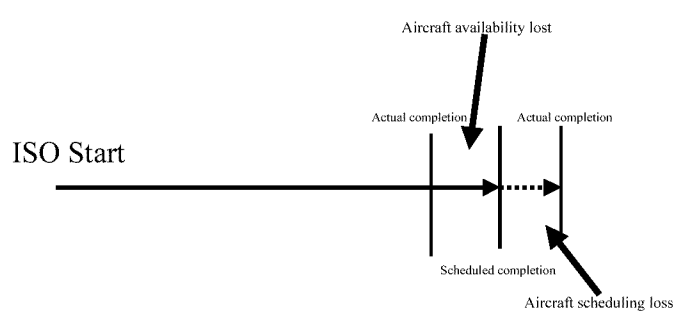

Figure 21. Aircraft Availability and Aircraft Scheduling Loss

Critical Path Results

The CP estimated durations for models M1 - M3 are presented first in Table 10.

Table 10. CP Aircraft Scheduling

	Models		
Durations (hours)	**M1**	**M2**	**M3**
Min	205.67	137.13	84.78
Mean	208.65	149.93	94.64
Max	213.69	167.80	104.95
CP estimate	212.00	168.00	109.27
Total acft availability lost	-340.85	-1806.92	-1463.00
Acft avail. lost (average)	-3.59	-18.07	-14.63
Maximum difference	-6.33	-30.87	-24.49
Total acft scheduling lost	6.23	0.00	0.00
Acft sched. lost (average)	1.25	N/A	N/A
Maximum difference	1.69	N/A	N/A

The CP1 model resulted in an estimated completion time greater than M1's duration 95 percent of the time, for a total of 340.85 hours of aircraft availability lost, with an average of 3.59 hours and the largest difference being 6.33 hours. The remaining 5 percent of the time the estimation was less than the simulated duration resulting in a total of 6.23 hours of aircraft scheduling lost, with an average of 1.25 hours and the greatest difference being 1.69 hours.

For the CP2 model, the estimate of 168.00 hours was greater than the simulated duration 100 percent of the time, and 1806.92 hours of aircraft availability was lost due to over estimation of completion time. The average loss was 18.07 hours with a maximum difference of 30.87 hours.

The CP3 estimate provided a scheduled completion time that was also greater than the simulated time in all cases. Additionally, this over estimated completion time

resulted in a loss of 1463.00 hours of aircraft availability. The average loss was 14.63 hours with a maximum loss of 24.49 hours.

Critical Chain Lower Estimate Results

The CC lower estimation time represents the predicted end of the ISO not including the project buffer. The CC lower estimated duration underestimated the completion time in all three models. The results are shown in Table 11.

Table 11. CC Aircraft Scheduling Using Lower Estimate

	Models		
Durations (hours)	**M1**	**M2**	**M3**
Min	205.67	137.13	84.78
Mean	208.65	149.93	94.64
Max	213.69	167.80	104.95
CC lower estimate	204.00	111.87	68.22
Total acft availability lost	0.00	0.00	0.00
Maximum difference	N/A	N/A	N/A
Total acft scheduling lost	465.38	3806.08	2642.00
Acft sched. lost (average)	4.65	38.06	26.42
Maximum difference	9.69	55.93	36.73

The lower CC1 estimate of 204.00 hours resulted in 465.38 hours of aircraft scheduling loss. The largest difference was 9.69 hours with an average loss of 4.65 hours. No aircraft availability was lost.

By using the CC2 lower limit of 111.87 hours, 3806.08 hours of aircraft scheduling loss occurred. The largest difference was 55.93 hours with an average of 38.06 hours. No aircraft availability loss occurred.

Using the CC3 lower duration of 68.22 hours resulted in 2642.00 hours of aircraft scheduling loss. The largest difference was 36.73 hours with an average of 26.42 hours. No aircraft availability was lost.

Critical Chain Upper Estimate Results

The CC upper estimate includes the project buffer. Table 12 shows these results.

Table 12. CC Aircraft Scheduling Using Upper Estimate

	Models		
Durations (hours)	**M1**	**M2**	**M3**
Min	205.67	137.13	84.78
Mean	208.65	149.93	94.64
Max	213.69	167.80	104.95
CC upper estimation	237.00	156.87	95.22
Total acft availability lost	-2834.62	-825.39	-200.54
Acft avail. lost (average)	-28.35	-11.31	-3.86
Maximum difference	-31.33	-19.74	-10.44
Total acft scheduling lost	0.00	134.46	142.54
Acft sched. lost (average)	N/A	4.98	2.97
Maximum difference	N/A	10.93	9.73

For CC1, the upper estimate of 237.00 hours always overestimated the completion time. This resulted in 2834.62 hours of aircraft availability lost, with 31.33 hours as the largest difference and an average of 28.35 hours. No aircraft scheduling loss occurred.

The CC2 upper estimate of 156.87 hours overestimated completion time 74 percent of the time. This resulted in 825.39 hours of aircraft availability lost. The underestimation (26 percent of the time) resulted in 134.46 hours of aircraft scheduling lost. The maximum differences were 19.74 hours and 10.93 hours respectively with the corresponding averages of 11.31 hours and 4.98 hours.

By using the CC3 upper estimate of 95.22 hours, the duration was overestimated 52 percent of the time. This resulted in 200.54 hours of aircraft availability lost. Forty-eight percent of the time, the duration was underestimated resulting in 142.54 hours of

aircraft scheduling loss. The maximum differences were 10.44 and 9.73 hours respectively with an average loss of 3.86 and 2.97 hours.

Primary Research and Investigative Questions

The primary research question for this thesis was **"Can the use of Critical Chain scheduling reduce the ISO flow time?"** In order to answer the primary research question, the following subordinate investigative questions were answered.

The first investigative question "*What are the key differences between Critical Path and Critical Chain methods?*" was addressed in Chapter 2. Two key differences are, the scheduling of scarce (constrained) resources explicitly in the beginning of the scheduling process by CC, and the removal of safety time from individual tasks and their aggregation into specific project buffers. The first buffer occurs at the end of the project in what is known as the project buffer. Safety time is also added at the end of all feeding tasks in what are called the feeding buffers. Resource buffers are also added to schedule the availability of resources that are not currently working on the critical chain activities.

The second investigative question, "*What are the results of applying a Critical Path analysis to the ISO project?*" is examined by the identification of the critical path activities of the ISO, and the formulation of the three CP models. The complete work breakdown structures (WBS) for these three versions of the CP are shown in Appendices K – M. Asterisks (*) highlight the critical path activities.

There are only three critical path tasks in the CP1 model as a result of the No Earlier Than (NET) constraints. These tasks take place on the last day of the ISO. There

is no lag time between the finish of one task and the start of the next. Appendix K details the complete WBS for CP1.

There are only four critical path tasks for the CP2 model, because CP tasks have no lag between the finish of a task and the start of its successor. The shift schedule constraints of the workers (resource constraints) results in downtime where no work is being performed. This creates down time between the end of swingshift and the start of following dayshift. The complete WBS is shown in Appendix L.

For CP3, a large change is noted in the CP. A continuous set of CP tasks is now present because all policy constraints are removed. Work is accomplished continuously. The complete WBS is shown in Appendix M.

The third investigative question "*Are there opportunities for improving the ISO schedule (from the current schedule) using Critical Path?*" is answered by the comparison of the CP models CP1 – CP3 estimated duration times. The results are shown in Table 13. By eliminating the No Earlier Than (NET) policy constraints, and increasing the shift coverage, the duration time reduces from the current 212.00 hours to 168.00 hours and 109.27 hours respectively. However, these improvements are not the result of applying CP principles per se. Although CP analysis highlights these potential improvements, they exist as a result of removing or changing the scheduling policy constraints and not solely by the application of the CP method itself.

Table 13. CP Durations

	Models		
Durations (hours)	**CP1**	**CP2**	**CP3**
CP estimate	212.00	168.00	109.27

The fourth investigative question "*What are the results of applying a Critical Chain analysis to the ISO project?*" is answered by examining the CC versions of the models. The complete WBSs are shown in Appendices M – O. Asterisks (*) highlight the critical chain activities. In order for the CC1 model to replicate the current ISO process with certain tasks starting on specified days, No Later Than (NLT) constraints had to be added to the model. This is due to the process of CC scheduling tasks from their Late Finish (LF) time. If the NLT constraints were not added, all tasks would adhere to the NET constraint, by starting at the project's LF. This model behavior, coupled with the reduction of task durations by 50 percent, would result in half the allotted time for the ISO. The NLT constraint for each day resulted in each individual day having its own CC. Appendix N details the WBS for the CC1 model.

For the CC2 model, the NET (and subsequent NLT) constraints were removed. This resulted in seven CC tasks. These seven tasks occurred on the last day of the ISO as would be expected, since the shift schedule constraints allows a gap between the finish of one task and the start of the subsequent tasks on the next day. There is down time between the end of swingshift and the start of following dayshift. The complete WBS is shown in Appendix O.

For CC3, a large change is noted in the CC. A continuous set of CC tasks is now identified because all constraints have been removed. Work is accomplished continuously. The complete WBS is shown in Appendix P.

The fifth investigative question "*Are there opportunities for improving the ISO schedule (from the current schedule) using Critical Chain?*" can be answered by a comparison of the CC estimations compared to the current duration of 212.00 hours.

This was answered previously in the sections titled Critical Chain lower estimation results and Critical Chain upper estimation results. Table 14 shows the CC estimations. As in the CP case, removing the NET and shift schedule constraints results in the CC estimation to be less than the current duration of 212 hours.

Table 14. CC Durations

	Models		
Durations (hours)	**M1**	**M2**	**M3**
CC lower estimate	204.00	111.87	68.22
CC upper estimate	237.00	156.87	95.22

It must be noted here that while the CP method provides a single, pessimistic estimate of project duration, the CC method provides a range of values over which the actual duration would fall. While it is beyond the scope of this research to investigate the benefits of the CC method as a result of its recognition of the effects of human behavior (see Chapter 2), we can assess the usefulness of the CC method in providing more realistic bounds on project completion times.

In all the CC models (CC1 - CC3), resource, feeder, and a project buffers were added to the schedule to protect the critical chain tasks. By inserting these buffers, maintenance supervision can monitor the status of the ISO. By monitoring the feeding buffers' status, they can allocate more or less resources to certain tasks depending on buffer consumption. The resource buffers can be used to alert personnel when they need to be ready to work on the ISO aircraft, which allows their supervision to schedule shifts accordingly. The project buffer provides a buffer for the entire project. If the project buffer is steadily consumed during the ISO, this signal with the associated consumed feeder buffer would provide supervision with a starting point for determining the cause of

the increase in ISO time. Parts availability, qualification of personnel, training, and availability of support equipment are just a few of the problems that may be noted.

The final investigative question "*Are there differences in schedule performance for the ISO project between Critical Chain and Critical Path methods?*" was answered previously in the discussion of the Critical Path, Critical Chain lower, and Critical Chain upper estimates. Table 15 shows a synopsis of the results.

Table 15. CC to CP Comparison

	Models		
Durations (hours)	**M1**	**M2**	**M3**
CP estimate	**212.00**	**168.00**	**109.27**
Total acft availability lost	-340.85	-1806.92	-1463.00
Total acft scheduling lost	6.23	0.00	0.00
CC lower estimate	**204.00**	**111.87**	**68.22**
Total acft availability lost	0.00	0.00	0.00
Total acft scheduling lost	465.68	3806.08	2642.00
CC upper estimation	**237.00**	**156.87**	**95.22**
Total acft availability lost	-2834.62	-825.39	-200.54
Total acft scheduling lost	0.00	134.46	142.54

With the six investigative questions answered the primary research question **"Can the use of Critical Chain scheduling reduce the ISO flow time?"** can be answered. The use of Critical Chain scheduling did not directly improve the ISO process. CC scheduling did however identify possible improvement areas in the ISO schedule. By removing the policy and schedule constraints, CC scheduling identified a reduced ISO schedule with the added benefit of more accurately predicting the completion time of ISO aircraft. By providing a better estimate of aircraft completion, aircraft can be scheduled more effectively. This scheduling effectiveness results in increased aircraft availability. The current ISO schedule is 212.00 hours and takes 9 days to complete. CC scheduling

showed that by removing the NET and shift schedule constraints the ISO could be decreased to 95.22 hours; a reduction of nearly 55 percent. This CC ISO takes 3 days to complete and provided the most accurate approximation of completion time for aircraft scheduling purposes. Additional benefits are the adding of resource, feeding and project buffers to the schedule. These buffers provide the buffer at key points in the schedule and can be used by supervision to monitor the ISO process. Further discussion will be presented in the Chapter 5 when managerial considerations are presented.

Conclusion

In this chapter the results of the ISO project simulations were presented. The Friedman *Fr* test was used to verify that the means were statistically different. The estimated durations derived from the CP and CC schedules were presented. These times were used to show the difference between their values and the simulated values. A discussion of aircraft availability lost and aircraft scheduling lost which occurred by using the estimated completion times of the CP and CC models compared to the actual simulation results followed. The chapter ended with the answering of the investigative and primary research questions. In Chapter 5, the management implications will be addressed along with recommendations for further research.

V. Conclusions and Recommendations

Introduction

Chapter 1 provided the foundation for this thesis with a discussion of the United States Air Force Special Operations Command (AFSOC) high demand, low-density weapon systems (AC-130H, AC-130U, MC-130H aircraft) belonging to the 16th Special Operations Wing (SOW) stationed at Hurlburt Field, Florida. Due to their limited numbers, aircraft availability is a key issue. Reducing aircraft downtime by improved scheduling during the -130 Isochronal inspection process (ISO) was the center of this thesis. By reducing aircraft downtime, increased aircraft availability could result without purchasing more aircraft.

Chapter 2 detailed the current ISO process and how it can be viewed as a project because it consists of a complex set of tasks, completed either in parallel or sequentially, with a definite start and end, with technicians from different organizations completing the inspections. These aspects of the ISO are also characteristics of projects, and the ISO process can be modeled as a directed, acyclic network. As such, project management techniques appeared to be suitable to the ISO environment. The chapter ended with the evolution of project management from Critical Path Methodology (CPM) to Critical Chain (CC) scheduling.

Chapter 3 provided a discussion of the methodology used in this thesis. The gathering of data started the chapter, followed by the development of the three Microsoft Project 2000 models (M1 - M3). M1 represents the current situation. M2 removed the Not Earlier Than (NET) constraint, and M3 removed the shift schedule constraint. Next,

CP estimated durations for the three scenarios were calculated in models (CP1 – CP3). The CC estimates for the three models (CC1 – CC3) were developed by cutting the task times by 50 percent and adding resource, feeding, and project buffers to the schedule according to currently accepted CC methods. The use of the Beta distribution to develop simulated task times for 100 independent simulations was described as the basic experiment preformed. The 100 simulated task time sets were input into the three models M1 – M3 and their durations were recorded.

Chapter 4 reviewed the results of the simulations and compared the durations (*Te*) to the CP and CC estimated durations for the particular model. The CP and CC tasks for each model were noted and the six investigative questions and the primary research question were answered.

This chapter will briefly summarize the results from Chapter 4, followed by an extended examination of the results to managerial implications. The chapter will end with a discussion of the thesis limitations, future research issues, and a summary of the findings.

Findings

The basic findings showed that the CP estimations over estimated the simulated actual ISO times 100 percent of the time in the M2 and M3 models and 95 percent of the time in the M1 model. This resulted in 1806.92 hours, 1463 hours, and 340.85 hours of lost aircraft availability respectively. The underestimation 5 percent of the time resulted in 6.23 hours of aircraft scheduling lost in the M1 model. Table 16 provides the results.

Table 16. CP Results

	Models		
Durations (hours)	**M1**	**M2**	**M3**
CP estimate	212.00	168.00	109.27
Total acft availability lost	-340.85	-1806.92	-1463.00
Total acft scheduling lost	6.23	0.00	0.00

An argument could be made that, while not captured by the model, a scheduled completion time would hardly ever be improved upon. In other words, if the CP model established a completion time and that time was published as a deadline, human nature would dictate the entire time would be used to complete the ISO. The phenomenon is called *Parkinson's Law* named after its originator Professor Cyril Northcote Parkinson. Professor Parkinson stated that work will expand to fill the time allotted (Parkinson, 2001). Parkinson's Law, coupled with the student syndrome (Chapter 2), suggests that workers will not start a task early, even when possible. This results in project completions that are never earlier than scheduled. This in turn results in no room for error or the ability to overcome problems if they arise at the end of the ISO.

This leads to the larger issue of the aircraft availability lost. With the current situation, 340.85 hours of aircraft availability was lost. If the duration estimate times were more accurately scheduled, aircraft availability would increase. By allowing the ISO schedule to take longer than it might normally have, more work (non engineering based inspections) gets added to the ISO, personnel are tasked to complete other details, and possibly manning reductions might take place. Aircraft availability lost will be further discussed with the CC estimates next.

The use of CC scheduling resulted in two durations for each model, a lower estimation and an upper estimation (project buffer included). Using the lower estimation resulted in 0 hours of lost aircraft availability, because the estimate was always less than the 100 simulated durations all three models. This underestimation of duration produced 465.68, 3806.08, and 2642.00 hours of aircraft scheduling loss in the M1, M2, and M3 models respectively. The results are shown in Table 17.

Table 17. CC Lower Estimation Results

	Models		
Durations (hours)	**M1**	**M2**	**M3**
CC lower estimate	204.00	111.87	68.22
Total acft availability lost	0.00	0.00	0.00
Total acft scheduling lost	465.68	3806.08	2642.00

Using the CC lower estimation would result in a risk of scheduling the aircraft when it is not ready. This can cause cancelled training and real-world missions, poor relations with the operational side of the wing, and, most importantly, tremendously low aircraft scheduling effectiveness. Scheduling effectiveness is used as one of the key metrics on aircraft performance briefed up the chain of command. Providing such a low estimate may seem like a good approach at first, but has serious complications. In order to try to meet the reduced schedule, maintenance may suffer, morale will be reduced, and ultimately a poor quality product would be the result. As stated in Chapter 2 (on the discussion of CC scheduling) the lower estimate should not be used to determine the project duration. The CC upper estimate (project buffer included) is the only estimate that stays fixed and should be used for scheduling purposes. The CC upper estimate will be discussed next.

Using the upper CC estimation resulted in 2834.62 hours of aircraft availability lost in the M1 model, 825.39 hours in M2, and 200.54 hours in M3. Aircraft scheduling loss occurred in two models with the upper CC estimation resulting in 134.46, and 142.54 hours for M2 and M3 respectively. Table 18 shows the upper CC estimation results. Using the CC upper estimate results in both overestimation and underestimation of the completion time of the ISO depending on the scenario involved. However, the difference is less than the CP duration, except in the M1 model.

Table 18. CC Upper Estimation Results

	Models		
Durations (hours)	**M1**	**M2**	**M3**
CC lower estimate	237.00	156.87	95.22
Total acft availability lost	-2834.62	-825.39	-200.54
Total acft scheduling lost	0.00	134.46	142.54

There is a tradeoff between underestimating and overestimating the completion time. By underestimating, supervision forces workers to cut safety time out of their tasks, workers have to work harder and faster, training of new personnel might suffer, and ultimately, the quality of the end product suffers and scheduling effectiveness is decreased. However, overestimating the duration results in workers that have scheduled idleness, there is no pressure to make their process better, proficiency might be lost, job satisfaction is lowered because tasks are not demanding, and ultimately, the end product may suffer. Additionally, aircraft availability is lost.

In a perfect world, the exact duration of the ISO would be known in advance, and the aircraft and workers could be scheduled accordingly. In reality, this is far from the case. Choices must be made between scheduling early (and assuming the risk of

lateness), and scheduling later (and assuming the inefficiencies of idleness). A "middle ground" would provide the benefits of increasing aircraft availability without increasing the risk of aircraft scheduling loss.

Overall Findings

The current ISO schedule is 212 hours and takes 9 days to complete. The use of CC scheduling did not improve upon the current schedule except for removing slack from each task and aggregating it at key points in the ISO schedule.

Under the current ISO conditions (constraints of Not Earlier Than and shift schedules intact), the CP estimated duration provides the best approximation of completion time, as the CC method provides no advantage under these types of constraints. If no changes are made to the current ISO process, the CP method is sufficient to manage the ISO work.

Additional Findings

CP and CC scheduling analysis highlighted the opportunity that by removing the NET and shift schedule constraints the ISO could be decreased to 95.22 hours; increasing aircraft availability 116.78 hours per aircraft. The CC3 ISO takes 3 days to complete and provided the most accurate approximation of completion time for aircraft scheduling purposes.

When only the NET constraint is removed, the CC upper estimation provided the best duration approximation. Aircraft availability was increased 55.13 hours per aircraft over the current schedule used by the ISO.

As stated previously, the best-case scenario (in terms of rapid project completion) occurs when both constraints are removed. Under these conditions, the CC upper estimation resulted in only 200.54 hours of lost aircraft availability over 100 simulated aircraft. This accurate prediction results in an 86 percent increase in aircraft availability over the CP estimate. When an aircraft schedule is built to take advantage of this early finish schedule, 142.54 hours of aircraft scheduling loss occurred but the largest duration was only 9.73 hours. This could be avoided entirely by simply modifying the project buffer following the CC implementation methodology.

Managerial Implications

The use of CC scheduling results in the largest increase in aircraft availability, when time constraints are removed from the project. If a situation arose that required the ISO facility to increase its output, the CC schedule would provide the best approximation of duration time and the most accurate way to schedule aircraft to maximize aircraft availability. The current 9-day (212 hour) ISO could be reduced to a 5-day (156.87 hour) schedule or if a surge was required a 3-day, 3-shift schedule could be used to complete the ISO in approximately 95.22 hours.

In order to determine the number of personnel and their work times for each schedule, the current schedule was compared against the CC2 and CC3 proposed schedules. The shift schedules are shown in Appendices Q, R and S.

Appendix Q shows the current work schedule. The schedule shows that the majority of the work occurs on days 4 – 7 of the ISO. This is when the greatest number of workers are scheduled.

The reduced ISO schedule (Appendix R) is the result of the NET constraint being removed. The schedule is reduced to 5 days. The current manning situation will be able to accomplish the 5-day schedule with no additional personnel. The majority of the work is on days 2 and 3 of the ISO.

The surge ISO schedule, which could be used in a wartime situation or any time that requires an increase in aircraft availability, is shown in Appendix S. This schedule takes 3 days and would require an additional shift of workers, except for ISO engine personnel, which would require two additional shifts. Fifty percent of the work is accomplished on day 2 of the ISO. Current manning levels would have to be assessed to determine feasibility. The benefit of increasing aircraft availability would have to be weighted against current manning levels. If additional manning was not available, the reduction in capability in certain areas, due to the movement of personnel from those areas to the ISO, would have to investigated compared to the increase in aircraft availability. Even though the ISO duration could be reduced, other tasks that affect the ISO may be increased because manning is not available, thus increasing the ISO duration. A global optimum of increasing aircraft availability needs to be addressed.

Limitations

This thesis is limited by the accuracy of the data provided by the 16 EMS ISO inspection section. The initial task times provided are the basis for this thesis. Inaccurate task times, availability of personnel, qualifications of personnel to perform required work, and availability of required equipment and supplies have an affect on the results.

Another limitation is in the duration times of the simulated aircraft. Studies showed that the lognormal distribution closely resembles maintenance tasks times. The Beta distribution, with aforementioned parameters, was used because it resembles the lognormal distribution and has the added benefit of upper and lower limits. The values of 90 percent duration time for the initial values, the selected alpha, beta, A and B values for the Beta distribution will have an affect on the outcome. The extent of the effect is not known at this time and is an area for future research.

Future Research

Further research needs to be conducted into the realistic value of the estimated durations of the models by the CP and CC schedules. Actual ISO inspection times could be referenced for each ISO and than compared to the estimated times.

The ISO process at Hurlburt could be used as a field test by actually removing the NET and shift schedule constraints and comparing the actual ISO durations to the estimated times.

The procedures used to determine the CP and CC schedules for this thesis could be used on other military aircraft inspection processes to determine if improvements could be made to aircraft availability.

Additionally, the relevance of CC scheduling techniques should be investigated in other areas of aircraft maintenance, like the generation of aircraft for daily flying or deployment, off equipment maintenance actions to include repair and replacement of line or shop replaceable units. Any major project that could be modeled as a directed, acyclic network of tasks is worthy of investigation using the principles of CC scheduling.

This same technique could be investigated at the depot level. The C–130 depot inspection takes nearly 180 days. Reducing depot inspection time could provide additional aircraft availability far in excess of that available at organizational level.

Finally, since this thesis has shown that there is slack in the ISO schedule , the addition of depot tasks could be investigated. Incorporating depot tasks could reduce the amount of work that has to be accomplished at the depot, reducing downtime.

Summary of Findings

From the start of this thesis, the main objective was to determine if CC scheduling could increase aircraft availability. This thesis showed that CC scheduling could not by itself improve upon the existing ISO process, without adjusting policy constraints. It did however show that by removing policy constraints the ISO could be reduced increasing aircraft availability, and additionally more accurate estimations of the ISO duration would be possible further increasing aircraft availability.

Finally, the manning considerations for a 3-day schedule needs to be addressed in the area of global optimum for increasing aircraft availability instead of local optimums.

Appendix A. ISO Task Information

Pre ISO Prep (Friday)
Depanel aircraft for ISO wash (2 Flightline APG); Duration (2 hours); Predecessor (none)

Pre ISO Prep (Saturday)
Tow aircraft to Wash rack (7 Flightline APG); Duration (45 minutes); Predecessor (depanel)
Wash aircraft (5 Contractors); Duration (8 hours); Predecessor (depanel)
Tow aircraft to ISO hangar (7 Flightline APG); Duration (45 minutes); Predecessor (wash complete, defueled)

Day One (Sunday)
Jack aircraft (7 ISO-APG); Duration (1.5 hours); Predecessor (aircraft defueled, washed)
Set up stands (7 ISO-APG & 4 Eng-ISO); Duration (45 minutes); Predecessor (aircraft on jacks)
Depanel aircraft (7 ISO-APG & 4 eng-ISO); Duration (3 hours); Predecessor (stand setup)
`Critical engine inspection (4 ISO-Eng); Duration (8 hours); Predecessor (engines depaneled)

Day Two (Monday)
ISO-APG (dayshift) look/lube phase (9 ISO-APG); Duration (8 hours); Predecessor (aircraft depaneled)
ISO-APG (swingshift) look/lube phase (8 ISO-APG); Duration (8 hours); Predecessor (aircraft depaneled)
ISO-Eng (dayshift only) look phase (10 ISO- Eng); Duration (8 hours); Predecessor (engine depaneled)
WEAPONS look phase (2 inspectors); Duration (21 hours days/swings); Predecessor (none)
COM-NAV look phase (2 inspectors); Duration (16 hours days/swings); Predecessors (elect power)
ELECTRICS look phase (2 inspectors) Duration (16 hours days/swings); Predecessor (elect power)
EW look phase (3 inspectors); Duration (6 hours); Predecessor (aircraft depanel)
HYDRAULICS look phase (5 inspectors); Duration (16 hours days/swings); Predecessor (aircraft depaneled, power)
SENSORS look phase (3 inspectors); Duration (6 hours); Predecessor (power)
CORROSION look phase (2 inspectors); Duration (7 hours); Predecessor (aircraft depaneled)
GUIDANCE CONTROL look phase (2 inspectors); Duration (7 hours); Predecessor (aircraft power)
FUEL CELL look phase (1 inspector); Duration (1 hour); Predecessor (aircraft power, depaneled)
NDI look phase (2 inspectors); duration (6 hours); Predecessor (aircraft depaneled)

Day Three (Tuesday)
ISO-APG (dayshift) lube/fix phase (9 ISO-APG); Duration (8 hours); Predecessor (look complete)
ISO-APG (swingshift) lube/fix phase (8 ISO-APG); Duration (8 hours); Predecessor (look complete)
ISO-Eng (dayshift only) fix phase (8 ISO-Eng); Duration (8 hours); Predecessor (elect power off)
WEAPONS fix phase (2 inspectors); Duration (8 hours); Predecessor (look complete)
COM-NAV fix phase (4/3 inspectors); Duration (12 hours days/swings); Predecessor (look complete)
ELECTRICS fix phase (2 inspectors); Duration (7,5 hours); Predecessor (look complete, no power)
EW fix phase (2 inspectors); Duration (8 hours); Predecessor (look complete)
HYDRAULICS fix phase (2 inspectors); Duration (7.5 hours); Predecessor (look complete)
SENSORS fix phase (2 inspectors); Duration (8 hours); Predecessor (look complete)
CORROSION fix phase (2 inspectors); Duration (8 hours)' Predecessor (look complete)
GUIDANCE CONTROL fix phase (2 inspectors); Duration (8 hours); Predecessor (look complete)
NDI fix phase (2 inspectors); Duration (8 hours); Predecessor (look complete)

Day Four (Wednesday)
ISO-APG (dayshift) fix phase (9 ISO-APG); Duration (8 hours); Predecessor (look complete)
ISO-APG (swings) fix phase (8 ISO-APG); Duration (8 hours); Predecessor (look complete
ISO-Eng (dayshift only) fix phase (8 ISO-Eng); Duration (8 hours); Predecessor (look complete)
WEAPONS fix phase (2 inspectors); Duration (8 hours); Predecessor (look complete)

COM-NAV fix phase (4/3 inspectors); Duration (12 hours days/swings); Predecessor (look complete)
ELECTRICS fix phase (2 inspectors); Duration (8 hours); Predecessor (look complete)
EW fix phase (2 inspectors); Duration (8 hours); Predecessor (look complete)
HYDRAULICS fix phase (2 inspectors); Duration (8 hours); Predecessor (look complete)
SENSORS fix phase (2 inspectors); Duration (8 hours); Predecessor (look complete)
CORROSION fix phase (2 inspectors); Duration (8 hours)' Predecessor (look complete)
GUIDANCE CONTROL fix phase (2 inspectors); Duration (8 hours); Predecessor (look complete)
NDI fix phase (2 inspectors); Duration (8 hours); Predecessor (look complete)

Day Five (Thursday)
ISO-APG (dayshift) fix/repanel (9 ISO-APG); Duration (8 hours); Predecessor (look/fix complete)
ISO-APG (swings) fix/repanel (8 ISO-APG); Duration (8 hours); Predecessor (look/fix complete)
ISO-Eng (dayshift only) fix/repanel (8 ISO-Eng); Duration (8 hours); Predecessor (look/fix complete)
COM-NAV complete (4/3 inspectors); Duration (12 hours days/swings); Predecessor (look/fix complete)
ELECTRICS complete (2 inspectors); Duration (8 hours); Predecessor (look/fix complete)
EW complete (2 inspectors); Duration (8 hours); Predecessor (look/fix complete)
HYDRAULICS complete (2 inspectors); Duration (8 hours); Predecessor (look/fix complete)
SENSORS complete (2 inspectors); Duration (8 hours); Predecessor (look/fix complete)
CORROSION complete (2 inspectors); Duration (8 hours)' Predecessor (look/fix complete)
GUIDANCE CONTROL complete (2 inspectors); Duration (8 hours); Predecessor (look/fix complete)

Post-ISO Day Six (Friday)
Remove workstands (16 ISO-APG); Duration (1 hour); Predecessor (inspections complete/repaneled)
Down jack aircraft (7 ISO-APG); Duration (1 hour); Predecessor (workstands removed)
Tow aircraft to flightline (7 ISO-APG); Duration (45 minutes); Predecessor (aircraft down jacked)
Aircraft refuel (3 ISO-APG); Duration (1 hour); Predecessor (aircraft towed to flightline)
Eng-ISO prop/leak chks (2 inspectors); Duration (4 hours); Predecessor (look/fix complete, aircraft towed)
ISO-APG prop/leak chks (2 inspectors); Duration (4 hours); Predecessor (look/fix complete, aircraft towed)
WEAPONS ops chks (2 inspectors); Duration (4 hours); Predecessor (look/fix complete, aircraft towed)
COM-NAV ops chks (2 inspectors); Duration (2 hours); Predecessor (look/fix complete, aircraft towed)
EW ops checks (2 inspectors); Duration (6 hours); Predecessor (look/fix complete, aircraft towed)
SENSORS ops chks (2 inspectors); Duration (4 hours); Predecessor (look/fix complete, aircraft towed)
GUIDANCE CONTROL ops chks (2 inspectors); Duration (4 hours); Predecessor (look/fix complete, aircraft towed)
HYDRAULICS leak chks (1 inspector); Duration (2 hours); Predecessor (look/fix complete, aircraft towed)

Post-ISO Day Seven (Saturday)
ISO-APG engine performance run (2 inspectors); Duration (8 hours); Predecessor (prop/lk chk completed)
Eng-ISO engine performance run (2 inspectors); Duration (8 hours); Predecessor (prop/lk chk completed)
FUEL CELL fix phase (2 inspectors); Duration (12 hours); Predecessor (aircraft towed to flightline)

Appendix B. ISO Work Breakdown Structure

Line	WBS	Task name	Duration	Predecessors	Resources
1	1	Pre ISO prep (Friday)	3 hrs		
2	1.1	ISO Start	0 days		
3	1.2	Defuel aircraft	1 hr	2	Flightline APG [300%]
4	1.3	Depanel for ISO wash	2 hrs	3	Flightline APG [200%]
5	2	Pre ISO prep (Saturday)	9.5 hrs		
6	2.1	Tow aircraft to washrack	0.75 hrs	4	Flightline APG [700%]
7	2.2	Wash aircraft	8 hrs	6	Wash Contractors [500%]
8	2.3	Tow aircraft to ISO hangar	0.75 hrs	7	Flightline APG [700%]
9	3	Day 1 (Sunday)	20.02 hrs		
10	3.1	Jack aircraft	1.5 hrs	8	ISO APG [700%]
11	3.2	Set up stands	1.04 hrs	10	ISO APG [700%], ISO Eng [400%]
12	3.3	Depanel aircraft	3 hrs	11	ISO APG [700%], ISO Eng [400%]
13	3.4	Critical engine inspection	8 hrs	12SS	ISO Eng [400%]
14	4	Day 2 (Monday)	45 hrs		
15	4.1	ISO APG Look/Lube phase	16 hrs	12	ISO APG [1,700%]
16	4.2	Engine look phase	8 hrs	13	ISO Eng [1,000%]
17	4.3	Weapons look phase	21 hrs	12	Weapons [200%]
18	4.4	Apply electrical power	0 days	13	
19	4.5	Communication/Navigation look phase	16 hrs	18	Comm/Nav [200%]
20	4.6	Electric/Environmental look phase	16 hrs	18	Electric/Environmental [200%]
21	4.7	Electronic warfare look phase	6 hrs	12	Electronic warfare [300%]
22	4.8	Hydraulic look phase	16 hrs	18	Hydraulic [500%]
23	4.9	Sensor's look phase	6 hrs	18	Sensor [300%]
24	4.10	Corrosion look phase	7 hrs	12	Corrosion [200%]
25	4.11	Guidance and Control look phase	7 hrs	18	GCS [200%]
26	4.12	Non Destructive Inspection look phase	6 hrs	12	NDI [200%]
27	4.13	Fuel cell look phase	1 hr	18	Fuel cell
28	5	Day 3 (Tuesday)	51 hrs		
29	5.1	ISO APG Lube/fix phase	16 hrs	15	ISO APG [1,700%]
30	5.2	Remove electrical power	0 days	19, 20, 22, 23, 25, 27	
31	5.3	Engine fix phase	8 hrs	16,30	ISO Eng [800%]
32	5.4	Weapons fix phase	8 hrs	17	Weapons [200%]
33	5.5	Communication Navigation fix phase	12 hrs	19	Comm/Nav [700%]
34	5.6	Electric/Environmental fix phase	7.5 hrs	30	Electric/Environmental [200%]
35	5.7	Electronic warfare fix phase	8 hrs	21	Electronic warfare [200%]
36	5.8	Hydraulic fix phase	7.5 hrs	22	Hydraulic [200%]
37	5.9	Sensors fix phase	8 hrs	23	Sensor [200%]
38	5.10	Corrosion fix phase	8 hrs	24	Corrosion [200%]
39	5.11	Guidance and Control fix phase	8 hrs	25	GCS [200%]
40	5.12	Non Destructive Inspection fix phase	8 hrs	26	NDI [200%]
41	6	Day 4 (Wednesday)	52.5 hrs		
42	6.1	ISO - APG fix phase	16 hrs	29	ISO APG [1,700%]
43	6.2	Eng fix phase	8 hrs	31	ISO Eng [800%]
44	6.3	Weapons fix phase	8 hrs	32	Weapons [200%]
45	6.4	Communication Navigation fix phase	12 hrs	33	Comm/Nav [700%]
46	6.5	Electric/Environmental fix phase	8 hrs	34	Electric/Environmental [200%]
47	6.6	Electronic warfare fix phase	8 hrs	35	Electronic warfare [200%]
48	6.7	Hydraulic fix phase	8 hrs	36	Hydraulic [200%]
49	6.8	Sensors fix phase	8 hrs	37	Sensor [200%]
50	6.9	Corrosion fix phase	8 hrs	38	Corrosion [200%]

Line	WBS	Task name	Duration	Predecessors	Resources
51	6.10	Guidance and Control fix phase	8 hrs	39	GCS [200%]
52	6.11	Non Destructive Inspection fix phase	8 hrs	40	NDI [200%]
53	7	Day 5 (Thursday)	55 hrs		
54	7.1	ISO - APG fix/repanel	16 hrs	42,27	ISO APG [1,700%]
55	7.2	Eng fix/repanel	8 hrs	43	ISO Eng [800%]
56	7.3	Communication Navigation complete	12 hrs	45	Comm/Nav [700%]
57	7.4	Electric/Environmental complete	8 hrs	46	Electric/Environmental [200%]
58	7.5	Electronic warfare complete	8 hrs	47	Electronic warfare [200%]
59	7.6	Hydraulic fix complete	8 hrs	48	Hydraulic [200%]
60	7.7	Sensors fix complete	8 hrs	49	Sensor [200%]
61	7.8	Corrosion fix complete	8 hrs	50	Corrosion [200%]
62	7.9	Guidance and Control fix complete	8 hrs	51	GCS [200%]
63	8	Day 6 (Friday) Post ISO	19.48 hrs		
64	8.1	Remove workstands	1 hr	55, 57, 58, 59, 60, 61, 62, 54, 56, 44, 52	ISO APG [1,600%]
65	8.2	Down jack aircraft	1 hr	64	ISO APG [700%]
66	8.3	Tow aircraft to flightline	0.75 hrs	65	ISO APG [700%]
67	8.4	Aircraft refueled	1 hr	66	ISO APG [300%]
68	8.5	Engines prop leak checks	4 hrs	67	ISO Eng [200%]
69	8.6	Weapons operational checks	4 hrs	67	Weapons [200%]
70	8.7	Communication Navigation operational checks	2 hrs	67	Comm/Nav [200%]
71	8.8	Electronic warfare operational checks	6 hrs	67	Electronic warfare [200%]
72	8.9	Sensors operational checks	4 hrs	67	Sensor [200%]
73	8.10	Guidance and control operational checks	4 hrs	67	GCS [200%]
74	8.11	Hydraulic leak checks	2 hrs	67	Hydraulic
75	9	Day 7 (Saturday) Post ISO	23 hrs		
76	9.1	Engine performance runs	11 hrs	68	ISO APG [200%], ISO Eng [200%]
77	9.2	Fuel cell fix phase	12 hrs	76	Fuel cell [200%]
78	9.3	ISO end	0 days	77, 69, 70, 71, 72, 73, 74	

Appendix C. ISO Manning Requirements

AFSC	Name	Authorized Manning Level	Current Manning Level
2A5X1J	Airplane General (Crew Chief)	17	17
2A6X1B	Engines	10	10
2A6X6	Electric/Environmental	2	2
2A1X7	Electronic Warfare	2	2
2A6X5	Hydraulic	5	5
2A1X1	Sensors	2	2
	Corrosion	2	2
2A4X1	Guidance and Control (GCS)	2	2
2A7X2	Nondestructive Inspection (NDI)	2	2
	Fuel Cell	2	2
2A1X3	Communication/Navigation (Comm/Nav)	7	7
	Weapons	2	2
N/A	Aircraft Wash Crew (Contractor)	5	5
2A7X3	Aircraft Structural Maintenance	See Corrosion	See Corrosion

Appendix D. Simulation Values

WBS	TASK	Duration (hours)	A =	B =	1	2	3	4	5	6	7	8	9	10
	Pre ISO prep (Fri)													
1.1	ISO Start	0.00	0.00	0.00	0.00	0.00	0.00	0.00	0.00	0.00	0.00	0.00	0.00	0.00
1.2	Defuel aircraft	1.00	0.69	1.19	0.94	0.71	0.90	0.73	0.79	0.90	0.85	0.96	0.70	0.69
1.3	Depanel for ISO wash	2.00	1.38	2.38	1.49	1.69	1.83	1.52	1.75	1.72	1.53	1.89	1.58	1.78
2	Pre ISO prep (Sat)													
2.1	Tow aircraft to washrack	0.75	0.52	0.89	0.71	0.63	0.68	0.58	0.72	0.67	0.70	0.70	0.65	0.56
2.2	Wash aircraft	8.00	5.52	9.52	6.14	7.34	6.06	5.97	7.07	7.70	5.86	8.06	6.61	5.82
2.3	Tow aircraft to hanger	0.75	0.52	0.89	0.59	0.59	0.55	0.60	0.85	0.65	0.65	0.63	0.69	0.57
3	Day 1 (Sun)													
3.1	Jack aircraft	1.50	1.04	1.79	1.11	1.19	1.42	1.30	1.27	1.36	1.51	1.27	1.07	1.57
3.2	Set up stands	0.75	0.52	0.89	0.69	0.53	0.63	0.67	0.58	0.73	0.67	0.61	0.63	0.69
3.3	Depanel aircraft	3.00	2.07	3.57	2.80	2.11	2.59	2.82	2.45	2.67	2.45	2.61	2.51	2.19
3.4	Critical engine inspection	8.00	5.52	9.52	5.88	6.74	5.59	6.60	7.39	7.41	7.03	6.13	6.17	7.11
4	Day 2 (Mon)													
4.1	ISO APG Look/Lube phase	16.00	11.04	19.04	14.45	13.25	11.39	13.33	13.00	15.79	12.42	17.69	14.00	13.29
4.2	Engine look phase	8.00	5.52	9.52	6.56	7.71	6.02	6.94	6.37	6.32	7.45	6.40	6.93	6.60
4.3	Weapons look phase	21.00	14.49	24.99	21.38	20.89	16.81	17.93	17.12	19.05	15.26	22.29	19.96	20.11
4.4	Apply electrical power	0.00	0.00	0.00	0.00	0.00	0.00	0.00	0.00	0.00	0.00	0.00	0.00	0.00
4.4	Comm/Nav look phase	16.00	11.04	19.04	13.90	12.19	11.33	12.36	14.58	12.82	11.54	11.13	12.35	16.71
4.5	E/E look phase	16.00	11.04	19.04	16.32	14.45	13.20	13.58	11.92	11.82	11.40	13.76	17.86	17.13
4.6	EW look phase	6.00	4.14	7.14	5.10	5.78	6.33	5.27	6.19	4.54	4.75	5.35	5.59	5.28
4.7	Hydraulic look phase	16.00	11.04	19.04	12.73	13.90	14.97	11.45	11.21	12.42	14.83	16.45	15.37	14.87
4.8	Sensor look phase	6.00	4.14	7.14	4.23	4.50	5.32	4.44	4.47	4.63	4.98	4.81	5.56	4.37
4.9	Corrosion look phase	7.00	4.83	8.33	6.10	5.58	7.06	6.74	6.21	6.75	6.39	6.43	5.96	7.04
4.10	GCS look phase	7.00	4.83	8.33	5.47	5.60	5.55	7.50	7.26	5.25	6.38	7.62	7.14	5.78
4.11	NDI look phase	6.00	4.14	7.14	4.98	4.77	5.91	5.18	4.94	5.91	4.36	4.81	4.91	5.33
4.12	Fuel cell look phase	1.00	0.69	1.19	0.87	0.80	0.73	1.03	0.87	0.82	0.84	1.01	0.86	0.92
5	Day y 3 (Tue)													
5.1	ISO APG Lube/fix phase	16.00	11.04	19.04	14.65	16.20	11.61	13.75	14.38	12.13	12.18	12.82	13.80	13.07
5.2	Remove electrical power	0.00	0.00	0.00	0.00	0.00	0.00	0.00	0.00	0.00	0.00	0.00	0.00	0.00
5.2	Engine fix phase	8.00	5.52	9.52	6.46	6.87	6.01	7.52	7.00	6.09	6.85	7.43	8.01	6.62
5.3	Weapons fix phase	8.00	5.52	9.52	6.10	6.75	5.85	5.83	6.43	6.86	5.85	6.03	7.67	5.88
5.4	Comm/Nav fix phase	12.00	8.28	14.28	9.43	10.70	10.19	9.64	10.34	11.62	10.88	9.86	10.22	10.65
5.5	E/E fix phase	7.50	5.18	8.93	6.03	5.95	5.83	7.03	6.33	7.76	6.97	5.98	7.12	5.66
5.6	EW fix phase	8.00	5.52	9.52	8.29	6.00	6.31	7.27	6.13	8.50	6.53	7.95	7.32	6.11
5.7	Hydraulic fix phase	7.50	5.18	8.93	7.10	6.55	6.45	6.26	5.42	6.27	6.46	7.79	5.77	5.94
5.8	Sensors fix phase	8.00	5.52	9.52	5.88	6.76	8.55	7.47	7.39	7.28	7.77	7.08	6.15	6.29
5.9	Corrosion fix phase	8.00	5.52	9.52	5.95	6.99	6.58	7.77	7.49	6.81	6.58	6.99	7.15	7.50
5.10	GCS fix phase	8.00	5.52	9.52	5.77	8.42	5.91	6.58	7.67	6.24	6.14	7.22	7.16	6.00
5.11	NDI fix phase	8.00	5.52	9.52	6.36	7.08	6.18	6.29	6.66	7.96	7.14	6.73	5.70	6.82
6	Day 4 (Wed)													
6.1	ISO - APG fix phase	16.00	11.04	19.04	16.17	13.18	13.64	13.71	12.36	12.23	15.74	14.38	13.49	15.33
6.2	Eng fix phase	8.00	5.52	9.52	6.22	7.71	5.78	8.69	6.87	7.01	7.03	6.55	5.81	5.94
6.3	Weapons fix phase	8.00	5.52	9.52	7.28	6.61	6.48	7.30	6.01	5.69	8.00	6.95	7.96	5.76
6.4	Comm/Nav fix phase	12.00	8.28	14.28	10.33	8.64	9.85	10.57	10.14	13.63	10.61	9.87	9.97	8.86
6.5	E/E fix phase	8.00	5.52	9.52	6.93	5.68	7.60	6.82	6.65	5.92	5.79	6.04	7.15	6.15
6.6	EW fix phase	8.00	5.52	9.52	6.72	6.53	6.99	6.15	8.34	5.88	6.66	5.58	6.25	8.66
6.7	Hydraulic fix phase	8.00	5.52	9.52	7.07	7.11	6.76	6.62	6.25	8.68	5.93	7.47	6.55	6.87
6.8	Sensors fix phase	8.00	5.52	9.52	5.78	6.92	8.47	6.28	6.44	6.74	7.53	6.35	6.61	7.32
6.9	Corrosion fix phase	8.00	5.52	9.52	6.31	5.91	6.86	5.71	5.99	7.10	5.86	5.63	6.93	7.52
6.10	GCS fix phase	8.00	5.52	9.52	5.89	6.73	6.99	6.00	6.82	8.42	5.59	6.75	6.27	6.62
6.11	NDI fix phase	8.00	5.52	9.52	6.86	6.34	6.87	6.38	7.04	6.15	6.88	8.70	6.04	6.25
7	Day 5 (Thur)													
7.1	ISO - APG fix/repanel	16.00	11.04	19.04	12.89	13.66	13.79	13.66	13.73	11.18	12.29	12.17	11.52	12.93
7.2	Eng fix/repanel	8.00	5.52	9.52	6.56	5.93	5.59	6.14	6.71	8.36	6.90	6.05	7.75	7.96
7.3	Comm/Nav complete	12.00	8.28	14.28	8.53	10.74	11.56	12.27	11.82	8.76	9.59	9.07	10.11	9.52
7.4	E/E complete	8.00	5.52	9.52	6.95	5.68	6.56	6.02	5.75	6.57	6.11	8.03	7.81	7.36
7.5	EW complete	8.00	5.52	9.52	5.93	6.21	8.32	6.51	6.56	5.97	5.63	7.05	7.10	6.63
7.6	Hydraulic fix complete	8.00	5.52	9.52	5.75	8.15	6.04	6.66	6.54	7.98	8.53	6.65	6.80	6.31
7.7	Sensors fix complete	8.00	5.52	9.52	6.10	9.04	6.50	6.52	7.67	6.95	5.68	6.23	6.53	5.86
7.8	Corrosion fix complete	8.00	5.52	9.52	6.27	6.74	6.55	7.46	8.00	5.98	6.50	6.41	5.97	7.73
7.9	GCS fix complete	8.00	5.52	9.52	8.46	6.46	5.81	6.95	6.40	7.98	7.51	6.00	6.65	7.90
8	Day 6 (Fri) Post ISO													
8.1	Remove workstands	1.00	0.69	1.19	0.75	0.71	0.85	0.87	0.81	0.95	0.75	0.91	0.82	0.90
8.2	Down jack aircraft	1.00	0.69	1.19	0.84	0.99	0.93	0.86	0.89	0.85	0.75	0.78	0.91	0.73
8.3	Tow aircraft to flightline	0.75	0.52	0.89	0.68	0.57	0.60	0.66	0.54	0.53	0.59	0.57	0.53	0.78
8.4	Aircraft refueled	1.00	0.69	1.19	0.72	1.01	0.78	0.82	0.84	0.93	0.89	0.93	0.78	0.71
8.5	Engines prop leak checks	4.00	2.76	4.76	4.10	4.15	3.40	3.90	2.98	3.92	3.61	3.87	3.31	2.89
8.6	Weapons ops checks	4.00	2.76	4.76	3.19	3.58	3.06	4.27	3.85	4.23	2.97	3.38	4.22	3.28
8.7	Comm/Nav ops checks	2.00	1.38	2.38	1.67	1.66	1.72	1.81	1.88	1.72	1.46	1.43	1.56	1.58
8.8	EW ops checks	6.00	4.14	7.14	5.40	5.34	4.31	5.34	5.71	4.59	5.74	5.09	5.12	5.15
8.9	Sensors ops checks	4.00	2.76	4.76	2.99	3.25	3.27	3.61	4.17	3.32	3.81	3.32	3.05	2.95
8.10	GCS ops checks	4.00	2.76	4.76	3.55	3.95	3.25	3.00	3.19	3.61	3.28	3.14	2.81	2.77
8.11	Hydraulic leak checks	2.00	1.38	2.38	1.63	1.49	1.55	1.55	1.92	2.09	1.97	1.57	1.70	1.49
9	Day 7 (Sat) Post ISO													
9.1	Engine performance runs	8.00	5.52	9.52	7.89	6.20	6.41	5.78	7.60	7.34	7.34	5.87	6.08	8.33
9.2	Fuel cell fix phase	12.00	8.28	14.28	12.26	10.94	10.03	10.70	10.24	10.75	8.58	9.10	8.43	9.76
9.3	ISO end	0.00	0.00	0.00	0.00	0.00	0.00	0.00	0.00	0.00	0.00	0.00	0.00	0.00

WBS	TASK	11	12	13	14	15	16	17	18	19	20	21	22	23
1	Pre ISO prep (Fri)													
1.1	ISO Start	0.00	0.00	0.00	0.00	0.00	0.00	0.00	0.00	0.00	0.00	0.00	0.00	0.00
1.2	Defuel aircraft	0.75	1.04	0.71	1.04	0.87	0.80	0.93	0.88	0.94	0.94	0.74	0.85	1.01
1.3	Depanel for ISO wash	2.06	1.44	1.45	1.62	1.78	1.71	1.75	1.69	1.91	2.11	1.52	1.58	1.72
2	Pre ISO prep (Sat)													
2.1	Tow aircraft to washrack	0.74	0.66	0.83	0.60	0.67	0.68	0.69	0.73	0.61	0.62	0.63	0.62	0.53
2.2	Wash aircraft	6.21	9.19	6.50	7.16	7.12	6.66	5.63	6.92	5.77	8.45	6.53	6.50	7.10
2.3	Tow aircraft to hanger	0.63	0.81	0.60	0.53	0.61	0.60	0.67	0.73	0.57	0.54	0.61	0.66	0.58
3	Day 1 (Sun)													
3.1	Jack aircraft	1.48	1.06	1.27	1.21	1.50	1.41	1.18	1.27	1.28	1.29	1.34	1.31	1.20
3.2	Set up stands	0.71	0.55	0.64	0.58	0.53	0.67	0.60	0.71	0.61	0.59	0.54	0.69	0.68
3.3	Depanel aircraft	2.27	2.43	2.41	2.36	2.49	2.48	2.53	2.44	2.45	2.42	3.33	2.21	2.76
3.4	Critical engine inspection	7.20	6.55	6.97	6.95	8.78	7.67	6.20	7.13	7.65	6.06	7.54	7.98	6.05
4	Day 2 (Mon)													
4.1	ISO APG Look/Lube phase	12.97	11.69	13.78	13.37	14.89	15.20	13.65	15.59	12.55	12.57	13.53	12.67	13.58
4.2	Engine look phase	6.28	6.37	8.34	6.39	6.38	7.66	7.56	6.19	7.50	6.10	7.91	6.39	6.19
4.3	Weapons look phase	16.41	19.04	18.99	15.53	20.10	18.12	20.64	21.70	15.97	19.45	23.33	20.05	16.86
4.4	Apply electrical power	0.00	0.00	0.00	0.00	0.00	0.00	0.00	0.00	0.00	0.00	0.00	0.00	0.00
4.4	Comm/Nav look phase	12.99	11.61	12.22	13.10	11.31	11.88	17.08	14.32	15.37	14.64	13.51	13.47	14.01
4.5	E/E look phase	13.10	14.84	16.83	16.55	14.16	12.74	15.37	13.95	11.92	15.63	14.73	14.84	14.14
4.6	EW look phase	5.22	4.75	4.56	5.03	4.35	5.82	5.97	5.27	4.86	5.29	4.55	5.93	4.96
4.7	Hydraulic look phase	13.70	14.78	14.89	11.36	16.37	14.22	12.43	16.75	15.45	14.60	11.82	15.97	16.45
4.8	Sensor look phase	5.89	4.77	6.29	5.15	5.65	4.21	4.61	6.21	4.77	5.23	5.29	4.67	5.88
4.9	Corrosion look phase	6.80	7.31	4.86	5.82	7.09	5.81	7.18	5.78	6.42	5.78	5.02	6.57	5.45
4.10	GCS look phase	5.81	5.31	5.22	5.74	5.55	6.12	6.54	5.06	5.80	5.10	7.07	5.40	6.78
4.11	NDI look phase	4.85	5.20	5.73	6.05	5.32	6.07	5.16	4.99	6.07	6.59	5.07	5.68	5.03
4.12	Fuel cell look phase	0.81	0.70	1.03	0.92	0.89	0.80	1.01	0.88	0.74	0.75	0.99	0.79	1.11
5	Day y 3 (Tue)													
5.1	ISO APG Lube/fix phase	14.74	16.64	11.93	13.73	15.07	14.20	15.29	11.18	11.56	12.43	13.50	11.18	13.60
5.2	Remove electrical power	0.00	0.00	0.00	0.00	0.00	0.00	0.00	0.00	0.00	0.00	0.00	0.00	0.00
5.2	Engine fix phase	5.66	7.88	6.57	7.54	6.58	6.64	6.35	6.11	6.19	5.91	6.32	6.54	6.88
5.3	Weapons fix phase	7.62	5.86	6.87	7.97	6.38	6.68	5.94	7.88	6.63	6.40	6.32	6.77	6.60
5.4	Comm/Nav fix phase	10.83	9.34	8.61	9.92	8.95	8.74	12.49	11.00	10.70	9.57	11.24	8.39	10.77
5.5	E/E fix phase	5.72	5.25	5.71	8.02	6.87	6.33	5.62	5.93	6.92	5.36	5.96	7.41	5.89
5.6	EW fix phase	6.08	7.56	6.29	6.07	7.54	6.31	7.03	6.49	5.83	8.38	6.32	6.64	7.82
5.7	Hydraulic fix phase	6.18	6.45	5.66	6.98	8.13	7.23	5.54	6.02	6.17	7.27	7.40	6.17	8.03
5.8	Sensors fix phase	6.99	7.77	6.31	6.10	6.55	6.96	5.96	8.18	6.44	7.35	8.31	8.95	6.93
5.9	Corrosion fix phase	5.73	5.81	6.35	6.36	5.61	6.46	6.58	6.01	6.88	7.71	5.92	6.36	6.00
5.10	GCS fix phase	6.49	7.07	8.61	8.52	6.79	6.87	6.51	6.57	6.93	6.27	5.61	7.55	6.55
5.11	NDI fix phase	5.81	7.87	5.93	7.24	6.51	6.36	6.39	6.12	6.30	5.90	8.40	8.26	6.52
6	Day 4 (Wed)													
6.1	ISO - APG fix phase	16.09	14.12	12.85	15.49	11.78	13.50	14.13	13.70	13.18	11.91	12.35	11.94	17.04
6.2	Eng fix phase	7.68	7.54	7.89	8.04	6.27	6.73	6.88	5.82	7.35	6.90	5.92	7.69	7.20
6.3	Weapons fix phase	6.38	6.79	7.91	5.85	6.38	5.83	8.20	7.28	6.20	7.04	7.36	6.22	6.84
6.4	Comm/Nav fix phase	10.37	12.28	13.43	9.63	8.32	8.48	10.65	8.62	9.47	12.17	8.40	10.36	10.74
6.5	E/E fix phase	7.45	7.13	6.08	6.66	6.16	6.84	8.19	6.40	6.33	6.61	6.29	7.50	6.76
6.6	EW fix phase	7.69	6.48	7.09	6.72	7.05	5.66	7.64	7.26	7.42	7.07	5.58	7.30	7.61
6.7	Hydraulic fix phase	7.75	6.21	6.75	7.64	5.93	7.68	8.05	5.78	7.22	8.45	7.71	6.80	6.08
6.8	Sensors fix phase	9.41	8.34	8.12	6.90	7.97	7.14	7.82	6.36	6.72	7.23	6.06	6.92	6.03
6.9	Corrosion fix phase	6.78	6.55	6.22	7.02	6.83	7.48	6.29	6.58	7.75	7.23	7.33	6.03	5.97
6.10	GCS fix phase	8.11	6.71	7.85	8.38	7.77	7.75	5.94	5.53	6.55	6.74	6.60	6.85	6.83
6.11	NDI fix phase	5.64	8.55	7.37	5.91	7.17	7.03	6.05	5.79	7.49	6.84	8.29	5.92	6.67
7	Day 5 (Thur)													
7.1	ISO - APG fix/repanel	13.12	13.54	13.82	15.17	11.44	14.27	14.11	13.05	11.66	12.62	13.52	16.60	12.56
7.2	Eng fix/repanel	6.04	6.05	6.80	6.49	7.70	7.61	6.25	6.06	6.78	8.40	6.28	6.41	7.43
7.3	Comm/Nav complete	10.63	9.28	11.07	11.74	9.48	12.87	11.01	11.63	8.46	11.42	9.20	10.80	12.44
7.4	E/E complete	7.02	6.64	7.26	5.93	5.69	7.65	6.11	7.13	6.71	5.74	8.14	6.34	6.09
7.5	EW complete	5.63	7.58	6.78	7.56	6.36	6.57	6.07	6.72	6.21	6.74	5.58	6.49	6.59
7.6	Hydraulic fix complete	9.08	5.64	5.82	7.77	6.27	6.62	7.48	5.63	6.49	7.07	6.79	6.26	8.16
7.7	Sensors fix complete	6.07	8.17	6.67	6.34	7.75	5.87	8.28	6.25	7.60	7.24	7.32	5.99	7.74
7.8	Corrosion fix complete	7.17	6.63	6.40	6.92	5.89	7.39	6.89	7.49	6.45	7.21	6.68	6.55	6.75
7.9	GCS fix complete	5.58	6.40	8.56	7.81	7.11	6.53	8.13	6.79	7.82	6.70	8.00	7.38	6.38
8	Day 6 (Fri) Post ISO													
8.1	Remove workstands	1.09	0.81	0.74	0.81	0.75	0.88	0.72	0.84	0.89	0.95	0.85	0.77	0.95
8.2	Down jack aircraft	0.80	0.95	0.86	0.77	0.92	0.83	0.76	0.78	1.07	0.89	0.84	0.91	1.02
8.3	Tow aircraft to flightline	0.63	0.66	0.55	0.71	0.56	0.74	0.74	0.63	0.62	0.57	0.63	0.71	0.60
8.4	Aircraft refueled	0.75	0.83	1.04	0.79	0.86	0.74	0.79	0.90	0.83	0.72	0.76	0.95	0.83
8.5	Engines prop leak checks	3.50	3.16	3.54	3.27	3.32	3.53	3.40	3.22	2.98	3.49	3.23	2.87	3.75
8.6	Weapons ops checks	3.63	3.49	3.81	4.42	2.78	3.24	2.95	3.21	3.83	3.00	3.13	3.39	3.19
8.7	Comm/Nav ops checks	1.48	1.47	1.86	1.80	1.86	1.84	1.62	1.78	1.76	1.81	1.97	1.45	1.68
8.8	EW ops checks	4.84	4.96	4.80	5.08	4.79	5.46	5.21	4.53	6.50	5.39	4.45	4.19	4.28
8.9	Sensors ops checks	3.54	3.50	3.13	2.96	3.22	4.40	2.87	3.32	3.47	3.19	3.16	3.68	4.26
8.10	GCS ops checks	3.59	3.32	3.62	3.10	3.02	3.17	3.07	3.24	4.45	3.70	3.79	3.64	4.10
8.11	Hydraulic leak checks	1.77	1.99	1.96	1.98	1.99	1.95	2.24	1.75	1.75	1.58	1.42	1.81	1.61
9	Day 7 (Sat) Post ISO													
9.1	Engine performance runs	7.75	7.34	7.20	6.48	6.65	6.06	8.26	7.20	5.75	6.10	8.02	7.99	6.92
9.2	Fuel cell fix phase	11.52	10.75	10.60	11.85	9.37	10.50	11.70	12.83	11.01	10.64	12.11	10.26	11.42
9.3	ISO end	0.00	0.00	0.00	0.00	0.00	0.00	0.00	0.00	0.00	0.00	0.00	0.00	0.00

WBS	TASK	24	25	26	27	28	29	30	31	32	33	34	35	36
1	Pre ISO prep (Fri)													
1.1	ISO Start	0.00	0.00	0.00	0.00	0.00	0.00	0.00	0.00	0.00	0.00	0.00	0.00	0.00
1.2	Defuel aircraft	1.00	0.78	0.74	0.84	0.86	0.77	0.84	0.87	0.81	0.83	0.87	0.89	1.01
1.3	Depanel for ISO wash	1.99	1.56	2.07	1.53	1.51	2.12	1.94	1.80	1.41	1.63	1.94	1.40	2.03
2	Pre ISO prep (Sat)													
2.1	Tow aircraft to washrack	0.53	0.57	0.58	0.57	0.57	0.68	0.65	0.67	0.77	0.59	0.55	0.61	0.71
2.2	Wash aircraft	7.07	6.95	6.64	6.00	6.19	7.04	7.16	7.35	6.23	7.99	6.68	6.12	6.09
2.3	Tow aircraft to hanger	0.62	0.60	0.53	0.66	0.77	0.59	0.53	0.68	0.66	0.63	0.59	0.72	0.68
3	Day 1 (Sun)													
3.1	Jack aircraft	1.29	1.28	1.13	1.42	1.27	1.70	1.18	1.56	1.33	1.44	1.34	1.19	1.37
3.2	Set up stands	0.71	0.61	0.69	0.54	0.63	0.65	0.58	0.77	0.52	0.58	0.53	0.68	0.83
3.3	Depanel aircraft	2.08	3.12	2.33	2.08	2.22	2.43	2.97	2.81	2.45	2.67	2.27	2.42	2.50
3.4	Critical engine inspection	7.17	6.69	7.74	6.83	6.76	7.05	7.20	5.73	7.44	7.06	6.83	6.29	6.56
4	Day 2 (Mon)													
4.1	ISO APG Look/Lube phase	12.17	12.84	12.97	15.25	12.99	15.66	12.86	17.09	13.74	16.54	12.24	12.02	15.79
4.2	Engine look phase	6.56	7.03	7.07	6.49	5.99	7.21	6.08	6.34	8.22	7.42	6.29	6.82	6.21
4.3	Weapons look phase	19.28	18.48	20.41	15.08	16.93	18.17	20.42	19.60	21.13	19.37	18.19	17.50	15.47
4.4	Apply electrical power	0.00	0.00	0.00	0.00	0.00	0.00	0.00	0.00	0.00	0.00	0.00	0.00	0.00
4.4	Comm/Nav look phase	16.85	14.36	13.00	13.20	13.51	11.92	12.83	15.66	17.80	14.05	13.06	11.23	13.31
4.5	E/E look phase	12.10	13.74	12.91	13.89	13.33	13.21	16.28	14.83	11.92	16.17	13.65	15.10	14.94
4.6	EW look phase	5.95	5.54	4.63	5.64	5.46	6.28	5.64	5.78	5.07	4.46	5.75	5.95	5.53
4.7	Hydraulic look phase	12.32	12.87	11.67	12.69	13.44	11.55	12.16	11.30	11.26	12.53	11.97	13.11	18.36
4.8	Sensor look phase	5.10	4.35	6.46	5.90	4.33	5.20	4.37	4.51	4.51	5.34	5.52	6.45	5.70
4.9	Corrosion look phase	5.95	5.80	5.69	5.23	6.43	6.28	5.40	5.12	5.42	6.43	6.77	5.17	6.97
4.10	GCS look phase	6.69	7.00	6.45	5.52	5.78	5.21	5.62	5.99	6.90	5.50	5.03	6.21	6.73
4.11	NDI look phase	5.34	4.75	4.94	5.70	4.74	5.54	4.29	5.37	5.62	4.68	4.57	5.48	5.50
4.12	Fuel cell look phase	0.96	0.73	0.77	0.80	0.97	0.90	0.89	1.01	0.78	0.74	0.77	0.95	0.78
5	Day y 3 (Tue)													
5.1	ISO APG Lube/fix phase	13.59	11.56	14.41	13.77	13.35	12.56	13.04	12.46	12.86	12.31	13.84	18.64	12.55
5.2	Remove electrical power	0.00	0.00	0.00	0.00	0.00	0.00	0.00	0.00	0.00	0.00	0.00	0.00	0.00
5.2	Engine fix phase	7.04	7.90	7.79	6.84	6.50	7.66	8.60	5.72	5.58	7.30	7.19	6.16	6.72
5.3	Weapons fix phase	6.27	6.45	7.89	6.62	6.97	6.31	7.44	6.92	6.97	6.83	7.99	7.62	8.49
5.4	Comm/Nav fix phase	12.04	13.32	9.58	10.82	10.64	8.83	10.43	9.49	10.83	11.89	10.13	9.89	8.80
5.5	E/E fix phase	5.85	5.66	6.99	6.02	6.11	6.57	5.88	6.97	6.53	5.60	7.71	6.46	7.83
5.6	EW fix phase	6.93	7.45	7.34	6.48	6.11	5.98	6.80	6.24	6.87	6.56	6.39	6.24	6.62
5.7	Hydraulic fix phase	5.27	6.03	5.97	7.15	6.22	6.10	6.91	6.58	6.37	5.64	6.50	7.02	5.65
5.8	Sensors fix phase	5.91	6.19	7.19	6.60	8.36	6.21	7.38	6.11	6.48	6.18	6.54	6.45	6.80
5.9	Corrosion fix phase	8.63	6.89	6.50	5.97	6.36	6.77	5.78	7.93	5.84	6.95	7.28	6.51	6.06
5.10	GCS fix phase	6.29	8.42	6.61	7.17	6.91	7.64	7.77	7.38	5.92	5.92	6.79	7.32	9.00
5.11	NDI fix phase	7.93	6.59	5.95	5.78	6.23	5.59	6.29	7.88	5.71	7.63	6.25	7.22	5.71
6	Day 4 (Wed)													
6.1	ISO - APG fix phase	13.30	11.79	11.18	13.45	16.56	14.15	14.77	14.34	16.03	12.35	13.56	12.94	16.48
6.2	Eng fix phase	6.75	7.80	6.94	5.94	7.17	7.75	6.17	8.15	7.00	9.05	6.01	5.74	6.68
6.3	Weapons fix phase	6.46	7.84	7.86	6.01	8.13	7.19	6.58	7.72	5.71	6.60	6.02	7.93	5.67
6.4	Comm/Nav fix phase	9.20	9.70	12.35	11.32	8.76	8.62	10.98	9.98	13.06	10.10	10.47	9.84	8.70
6.5	E/E fix phase	6.72	6.54	6.11	6.74	7.62	7.06	6.67	7.39	5.80	6.69	6.93	5.92	8.31
6.6	EW fix phase	7.59	7.23	7.07	6.45	6.69	6.03	8.76	6.32	5.80	8.10	6.54	6.82	6.35
6.7	Hydraulic fix phase	5.77	6.21	6.62	6.09	7.05	5.73	7.81	7.05	6.80	6.19	7.01	7.90	6.69
6.8	Sensors fix phase	7.90	7.98	7.10	6.07	5.89	5.90	6.67	6.33	6.99	6.80	7.56	7.46	6.16
6.9	Corrosion fix phase	6.63	7.42	6.26	6.90	8.87	5.88	6.69	5.90	7.11	6.47	6.87	6.42	8.44
6.10	GCS fix phase	7.82	7.66	7.76	6.56	7.27	6.03	7.67	6.96	7.49	8.63	7.08	7.56	6.30
6.11	NDI fix phase	7.17	7.47	7.65	6.11	6.90	5.57	6.67	7.36	6.04	5.54	6.89	6.87	6.46
7	Day 5 (Thur)													
7.1	ISO - APG fix/repanel	15.35	11.62	11.92	12.87	12.26	14.00	12.56	11.19	13.71	13.63	15.47	12.07	15.79
7.2	Eng fix/repanel	6.44	8.21	6.22	6.43	5.57	6.29	5.96	8.19	7.13	6.44	8.26	5.89	7.89
7.3	Comm/Nav complete	12.36	10.37	10.21	9.92	10.23	9.70	10.80	11.96	9.92	11.41	9.86	9.71	8.71
7.4	E/E complete	8.15	8.27	7.74	7.01	6.85	6.81	5.85	7.35	7.98	6.08	7.48	7.24	7.20
7.5	EW complete	7.66	7.39	6.10	5.59	5.67	6.77	6.78	5.83	6.47	6.41	6.77	5.62	5.73
7.6	Hydraulic fix complete	5.73	7.60	6.70	6.66	6.01	6.88	5.62	6.74	7.59	6.51	6.34	7.27	7.41
7.7	Sensors fix complete	5.82	6.43	6.24	6.24	6.89	6.11	7.26	7.49	5.57	8.21	5.84	6.95	6.90
7.8	Corrosion fix complete	6.68	7.68	6.68	6.23	6.36	7.30	6.17	7.32	8.60	6.01	6.01	6.30	5.88
7.9	GCS fix complete	7.33	7.71	7.20	6.56	7.22	7.23	6.85	7.06	5.72	5.92	5.89	6.53	6.90
8	Day 6 (Fri) Post ISO													
8.1	Remove workstands	0.74	0.85	0.80	0.97	1.09	0.98	0.99	0.83	0.71	0.76	0.83	0.96	1.08
8.2	Down jack aircraft	0.82	0.87	0.77	1.05	0.73	0.86	0.87	1.10	0.89	0.93	0.76	0.79	0.85
8.3	Tow aircraft to flightline	0.59	0.58	0.71	0.70	0.77	0.72	0.60	0.71	0.60	0.62	0.60	0.59	0.60
8.4	Aircraft refueled	0.83	0.77	0.91	0.92	1.02	0.93	0.95	0.80	0.81	0.94	1.01	0.72	0.89
8.5	Engines prop leak checks	2.79	3.17	3.12	3.26	2.83	3.14	3.57	2.84	3.07	3.24	3.06	3.71	2.98
8.6	Weapons ops checks	3.14	2.94	3.30	3.06	3.28	3.28	3.69	3.77	3.79	3.04	3.28	3.02	3.47
8.7	Comm/Nav ops checks	1.49	1.50	1.50	1.52	1.77	1.46	1.99	2.00	1.87	1.97	1.55	1.50	1.71
8.8	EW ops checks	6.52	4.75	4.89	4.83	5.07	5.84	5.08	5.48	4.89	4.57	4.30	4.55	5.07
8.9	Sensors ops checks	3.55	3.75	3.65	3.15	3.44	2.84	3.46	3.03	3.62	3.07	3.69	3.54	4.13
8.10	GCS ops checks	3.37	3.32	3.16	3.23	3.14	3.25	3.08	3.08	3.26	3.79	3.79	2.92	3.10
8.11	Hydraulic leak checks	2.13	1.55	1.58	1.72	1.80	1.45	1.63	1.91	1.49	1.44	1.68	1.41	1.55
9	Day 7 (Sat) Post ISO													
9.1	Engine performance runs	6.96	6.54	7.03	7.69	6.07	6.44	5.87	5.58	9.14	7.39	6.95	7.26	5.88
9.2	Fuel cell fix phase	11.23	8.57	10.65	10.17	9.46	9.01	10.16	8.43	10.41	12.56	9.99	11.21	9.82
9.3	ISO end	0.00	0.00	0.00	0.00	0.00	0.00	0.00	0.00	0.00	0.00	0.00	0.00	0.00

WBS	TASK	37	38	39	40	41	42	43	44	45	46	47	48	49
1	Pre ISO prep (Fri)													
1.1	ISO Start	0.00	0.00	0.00	0.00	0.00	0.00	0.00	0.00	0.00	0.00	0.00	0.00	0.00
1.2	Defuel aircraft	0.94	0.84	1.14	0.95	1.05	0.74	0.83	0.72	0.95	0.76	0.89	0.78	0.92
1.3	Depanel for ISO wash	1.55	1.58	1.67	1.74	1.80	1.89	1.59	1.60	1.57	1.61	1.51	1.74	1.76
2	Pre ISO prep (Sat)													
2.1	Tow aircraft to washrack	0.74	0.63	0.57	0.60	0.83	0.53	0.53	0.53	0.63	0.65	0.69	0.60	0.59
2.2	Wash aircraft	7.20	8.71	5.68	5.59	7.48	5.56	7.87	5.92	6.37	5.88	6.46	6.89	7.20
2.3	Tow aircraft to hanger	0.62	0.63	0.56	0.53	0.80	0.73	0.65	0.64	0.65	0.62	0.58	0.67	0.56
3	Day 1 (Sun)													
3.1	Jack aircraft	1.22	1.12	1.52	1.25	1.24	1.42	1.12	1.53	1.36	1.27	1.32	1.35	1.24
3.2	Set up stands	0.76	0.61	0.54	0.70	0.59	0.64	0.58	0.56	0.56	0.64	0.64	0.77	0.71
3.3	Depanel aircraft	2.80	2.55	2.89	2.82	3.04	2.60	2.32	2.47	3.12	3.02	2.98	3.40	2.48
3.4	Critical engine inspection	7.43	5.79	5.98	6.71	5.67	6.37	7.88	6.74	5.77	6.37	7.15	7.46	6.12
4	Day 2 (Mon)													
4.1	ISO APG Look/Lube phase	11.98	13.98	13.63	12.10	11.85	16.34	12.91	14.65	12.77	16.56	11.30	13.05	12.71
4.2	Engine look phase	6.80	6.78	6.78	5.87	6.89	7.89	6.22	5.75	7.79	5.64	5.93	6.20	6.80
4.3	Weapons look phase	15.90	19.52	17.02	14.88	15.92	17.25	22.86	15.92	18.25	18.24	18.90	16.38	18.25
4.4	Apply electrical power	0.00	0.00	0.00	0.00	0.00	0.00	0.00	0.00	0.00	0.00	0.00	0.00	0.00
4.4	Comm/Nav look phase	11.99	12.74	12.29	12.13	14.93	12.09	11.63	11.87	14.27	11.99	14.25	12.53	13.89
4.5	E/E look phase	13.18	11.32	12.51	14.58	11.77	14.95	11.77	13.99	12.92	12.47	12.74	12.95	15.19
4.6	EW look phase	4.93	4.57	5.26	5.40	4.58	6.59	5.24	4.96	4.55	4.58	5.05	5.25	5.58
4.7	Hydraulic look phase	12.69	11.24	15.53	12.64	16.21	13.41	11.62	14.18	14.11	14.55	12.00	15.20	12.77
4.8	Sensor look phase	4.97	5.29	5.46	4.98	5.11	6.99	4.95	5.51	5.10	4.92	5.88	4.32	4.63
4.9	Corrosion look phase	6.96	5.14	6.80	5.40	5.44	6.04	5.46	6.55	6.15	6.52	7.16	5.60	6.58
4.10	GCS look phase	6.04	5.27	5.48	5.96	7.53	7.23	6.15	7.59	5.41	5.78	5.11	5.12	5.47
4.11	NDI look phase	4.40	4.80	4.41	5.79	5.51	5.21	5.33	5.09	4.56	4.20	6.68	4.65	4.49
4.12	Fuel cell look phase	0.92	0.99	0.97	1.03	0.88	0.81	1.02	0.92	0.78	0.84	0.89	0.78	0.83
5	Day y 3 (Tue)													
5.1	ISO APG Lube/fix phase	14.25	13.39	12.64	11.83	13.20	15.85	13.67	11.81	13.91	13.56	13.53	11.12	12.87
5.2	Remove electrical power	0.00	0.00	0.00	0.00	0.00	0.00	0.00	0.00	0.00	0.00	0.00	0.00	0.00
5.2	Engine fix phase	6.63	8.04	6.12	7.54	6.26	6.19	5.75	6.23	6.20	6.85	7.17	6.53	7.11
5.3	Weapons fix phase	5.75	6.25	5.82	7.16	6.31	7.29	7.65	6.86	6.65	6.12	5.93	6.71	6.42
5.4	Comm/Nav fix phase	12.39	10.51	9.66	8.83	10.20	11.23	10.08	9.33	8.46	9.86	10.32	8.60	13.04
5.5	E/E fix phase	6.29	5.89	6.79	5.68	6.69	5.87	5.29	6.79	6.33	7.32	5.48	7.33	6.83
5.6	EW fix phase	6.41	7.89	7.23	6.98	6.25	5.98	8.12	7.12	7.67	7.66	5.90	6.90	6.82
5.7	Hydraulic fix phase	5.49	6.62	6.71	5.54	7.47	6.53	6.18	6.70	5.62	7.64	5.30	7.09	5.76
5.8	Sensors fix phase	5.62	6.67	6.36	6.87	7.94	6.73	6.83	8.35	9.09	8.42	6.20	6.90	7.36
5.9	Corrosion fix phase	7.32	5.70	6.62	5.71	7.07	7.67	6.62	7.05	6.16	6.78	5.88	5.72	6.04
5.10	GCS fix phase	7.38	5.88	6.86	6.62	5.91	5.82	5.64	7.17	6.24	6.24	6.58	6.56	6.81
5.11	NDI fix phase	6.71	6.20	5.83	7.73	7.80	5.92	6.03	5.64	5.84	6.07	6.18	6.51	7.11
6	Day 4 (Wed)													
6.1	ISO - APG fix phase	12.10	12.35	12.02	17.11	14.01	13.41	13.85	14.49	14.95	13.28	14.18	15.53	11.95
6.2	Eng fix phase	5.98	7.68	6.33	5.64	6.82	7.08	6.47	6.29	6.38	6.40	6.09	7.02	5.64
6.3	Weapons fix phase	8.33	6.52	5.83	6.87	6.15	7.23	6.87	7.82	7.08	7.87	7.73	8.06	6.67
6.4	Comm/Nav fix phase	9.69	11.69	11.65	8.64	9.57	8.63	9.45	9.44	9.56	9.46	9.83	11.44	10.86
6.5	E/E fix phase	8.08	6.66	6.94	5.79	6.63	7.90	6.21	5.58	6.30	6.07	7.88	5.99	7.18
6.6	EW fix phase	5.71	5.93	6.81	6.96	8.59	8.14	6.47	7.67	8.18	6.26	7.96	7.35	7.44
6.7	Hydraulic fix phase	6.80	6.62	7.79	6.57	6.41	8.09	6.63	6.21	7.31	6.25	6.65	7.79	6.27
6.8	Sensors fix phase	8.20	8.09	6.41	6.81	6.67	5.61	8.13	5.95	6.05	7.61	6.35	6.57	6.99
6.9	Corrosion fix phase	6.95	6.79	7.07	6.71	6.64	6.37	6.70	7.71	6.90	6.78	7.68	6.58	5.72
6.10	GCS fix phase	7.63	6.09	6.56	7.67	6.07	6.43	7.82	8.54	6.33	7.79	5.82	5.72	7.20
6.11	NDI fix phase	7.03	8.24	7.23	6.67	5.90	5.58	6.25	7.37	5.84	7.16	5.76	5.88	7.15
7	Day 5 (Thur)													
7.1	ISO - APG fix/repanel	11.08	13.73	13.28	16.13	16.01	13.57	15.55	18.03	11.53	12.51	12.90	14.05	12.24
7.2	Eng fix/repanel	6.30	8.46	8.86	6.98	7.15	6.08	6.35	6.94	7.20	7.92	7.60	6.53	6.98
7.3	Comm/Nav complete	13.04	10.69	8.78	10.28	10.51	8.46	10.85	10.61	8.90	8.80	10.07	9.73	10.20
7.4	E/E complete	8.87	8.05	6.14	6.66	7.54	7.82	8.21	6.24	7.65	5.57	6.53	7.20	5.88
7.5	EW complete	6.29	6.78	6.50	6.17	6.84	7.28	6.46	8.18	5.93	6.93	6.43	7.47	5.92
7.6	Hydraulic fix complete	5.68	6.64	7.02	7.33	7.71	6.15	7.54	7.88	6.29	5.64	6.25	6.04	6.71
7.7	Sensors fix complete	8.05	7.98	6.24	8.03	6.44	6.83	5.63	6.11	7.57	7.35	5.68	6.16	7.74
7.8	Corrosion fix complete	5.78	7.77	6.65	7.46	6.13	6.47	6.59	5.99	5.96	6.12	6.94	6.38	6.32
7.9	GCS fix complete	7.29	6.03	6.44	7.55	6.05	7.88	6.70	6.07	5.87	7.44	5.67	5.70	5.78
8	Day 6 (Fri) Post ISO													
8.1	Remove workstands	0.92	1.01	0.91	0.88	0.91	0.98	0.90	0.79	0.78	0.84	0.72	0.98	0.90
8.2	Down jack aircraft	0.77	0.87	0.73	1.01	0.87	0.90	0.73	0.90	0.71	0.78	0.74	0.98	0.78
8.3	Tow aircraft to flightline	0.80	0.65	0.68	0.58	0.69	0.78	0.65	0.61	0.57	0.54	0.59	0.59	0.65
8.4	Aircraft refueled	0.86	0.78	0.83	0.84	0.87	0.74	0.85	0.71	0.91	0.93	0.88	0.75	0.94
8.5	Engines prop leak checks	3.25	3.21	3.39	2.82	3.32	3.64	3.88	2.93	3.11	3.88	3.87	3.53	3.36
8.6	Weapons ops checks	3.69	3.08	3.38	3.21	3.20	2.92	4.20	3.52	2.95	3.54	3.18	3.81	3.36
8.7	Comm/Nav ops checks	1.59	1.62	1.89	2.04	1.44	1.65	1.88	2.00	1.86	1.53	1.60	1.68	1.92
8.8	EW ops checks	5.41	5.30	4.30	5.18	4.96	5.05	5.07	4.99	5.61	4.77	5.37	4.50	4.34
8.9	Sensors ops checks	3.71	4.56	3.17	3.08	3.17	3.25	3.45	3.25	3.40	2.97	3.62	3.01	3.12
8.10	GCS ops checks	3.59	2.80	3.65	4.47	3.91	3.99	3.07	4.28	4.11	2.89	3.49	3.58	3.18
8.11	Hydraulic leak checks	1.50	1.76	1.43	1.92	1.54	1.61	1.87	1.81	1.85	1.41	1.63	1.86	1.62
9	Day 7 (Sat) Post ISO													
9.1	Engine performance runs	5.72	7.24	6.03	6.03	5.80	6.24	5.98	7.35	6.61	6.98	5.78	6.65	5.73
9.2	Fuel cell fix phase	9.51	10.47	11.52	10.70	11.65	10.55	9.31	13.14	9.57	8.51	8.67	10.12	8.85
9.3	ISO end	0.00	0.00	0.00	0.00	0.00	0.00	0.00	0.00	0.00	0.00	0.00	0.00	0.00

WBS	TASK	50	51	52	53	54	55	56	57	58	59	60	61	62
1	Pre ISO prep (Fri)													
1.1	ISO Start	0.00	0.00	0.00	0.00	0.00	0.00	0.00	0.00	0.00	0.00	0.00	0.00	0.00
1.2	Defuel aircraft	0.89	0.99	0.97	0.74	0.88	0.79	0.89	0.70	0.83	0.79	1.03	0.74	0.85
1.3	Depanel for ISO wash	1.49	1.89	1.83	1.73	1.46	1.83	1.87	1.60	1.82	1.84	1.70	1.82	1.79
2	Pre ISO prep (Sat)													
2.1	Tow aircraft to washrack	0.60	0.69	0.53	0.56	0.74	0.64	0.62	0.62	0.58	0.59	0.57	0.68	0.56
2.2	Wash aircraft	5.99	5.74	7.19	5.96	7.70	5.76	6.82	5.64	7.80	5.66	7.12	8.67	6.76
2.3	Tow aircraft to hanger	0.68	0.61	0.62	0.60	0.75	0.77	0.56	0.63	0.71	0.55	0.63	0.53	0.67
3	Day 1 (Sun)													
3.1	Jack aircraft	1.22	1.15	1.49	1.17	1.12	1.28	1.44	1.30	1.16	1.18	1.43	1.32	1.25
3.2	Set up stands	0.75	0.63	0.71	0.54	0.66	0.67	0.67	0.62	0.66	0.73	0.64	0.75	0.57
3.3	Depanel aircraft	2.95	2.29	2.49	2.27	2.46	2.53	2.65	3.14	2.48	3.07	2.88	2.50	2.36
3.4	Critical engine inspection	5.82	7.90	6.56	8.15	6.80	6.34	8.15	6.91	6.49	6.14	7.39	8.39	7.43
4	Day 2 (Mon)													
4.1	ISO APG Look/Lube phase	12.30	11.72	17.13	11.83	12.59	12.35	16.16	15.28	11.55	15.05	14.60	15.97	14.05
4.2	Engine look phase	6.37	6.61	7.43	6.36	8.55	6.56	6.99	5.82	7.77	6.48	7.48	7.24	7.09
4.3	Weapons look phase	21.89	19.54	19.08	19.23	16.87	17.80	19.69	22.56	17.78	16.69	15.36	18.32	14.97
4.4	Apply electrical power	0.00	0.00	0.00	0.00	0.00	0.00	0.00	0.00	0.00	0.00	0.00	0.00	0.00
4.4	Comm/Nav look phase	16.88	12.16	13.95	16.01	14.63	12.48	11.74	14.53	15.57	16.24	13.90	14.12	14.44
4.5	E/E look phase	11.70	14.78	16.84	15.62	13.52	12.67	11.89	14.83	11.41	13.06	13.46	14.00	14.65
4.6	EW look phase	5.38	4.71	5.95	5.55	6.07	4.79	4.88	4.97	5.31	6.03	6.69	4.40	4.65
4.7	Hydraulic look phase	14.43	13.63	16.42	13.91	15.07	12.67	12.93	11.55	14.67	13.58	14.18	16.08	13.90
4.8	Sensor look phase	5.59	6.36	5.44	4.98	4.55	5.09	4.66	5.31	5.48	5.34	4.25	5.39	4.84
4.9	Corrosion look phase	7.58	6.32	5.85	5.90	5.14	5.49	5.10	5.11	6.29	6.37	5.32	5.92	5.41
4.10	GCS look phase	5.53	6.37	4.89	5.82	5.65	6.13	5.41	5.57	5.03	6.24	6.56	5.82	5.09
4.11	NDI look phase	5.08	5.57	4.43	5.02	5.02	4.67	4.35	5.48	4.39	4.73	6.39	5.94	4.61
4.12	Fuel cell look phase	0.91	0.73	0.84	0.91	0.92	0.87	0.83	0.92	0.87	0.70	0.73	0.71	0.89
5	Day y 3 (Tue)													
5.1	ISO APG Lube/fix phase	13.21	14.53	11.51	11.89	11.59	12.46	14.60	16.62	15.00	11.53	15.92	13.02	13.68
5.2	Remove electrical power	0.00	0.00	0.00	0.00	0.00	0.00	0.00	0.00	0.00	0.00	0.00	0.00	0.00
5.2	Engine fix phase	7.49	6.61	6.78	7.38	7.07	5.95	5.70	8.48	6.28	7.35	7.36	6.95	7.95
5.3	Weapons fix phase	8.20	8.14	7.09	8.37	6.32	7.32	7.64	6.67	5.68	6.60	6.06	5.64	7.80
5.4	Comm/Nav fix phase	8.59	10.58	10.39	11.15	9.95	8.96	9.47	10.02	11.88	11.59	11.33	9.39	12.50
5.5	E/E fix phase	5.27	5.36	6.06	5.84	5.55	5.27	6.01	5.26	5.93	5.34	5.51	6.46	6.78
5.6	EW fix phase	5.93	6.22	6.02	6.95	8.76	6.15	8.69	6.49	5.63	6.06	6.09	6.29	6.93
5.7	Hydraulic fix phase	6.22	5.53	6.39	5.97	6.70	5.70	5.47	6.89	6.44	6.39	5.65	6.50	5.45
5.8	Sensors fix phase	9.17	8.35	6.79	6.57	6.67	6.89	8.26	8.52	7.41	5.93	5.75	8.19	6.34
5.9	Corrosion fix phase	6.18	5.95	7.73	8.12	6.62	6.73	9.16	5.84	6.04	7.49	8.54	6.87	6.65
5.10	GCS fix phase	5.59	8.55	7.19	5.95	7.82	6.78	9.09	6.51	6.38	6.40	6.38	7.09	6.91
5.11	NDI fix phase	6.08	8.86	5.67	6.56	6.48	6.05	7.00	5.84	6.46	6.74	7.61	5.88	7.46
6	Day 4 (Wed)													
6.1	ISO - APG fix phase	13.94	14.93	13.69	15.39	12.53	12.40	14.73	12.44	11.85	12.03	13.01	11.75	11.74
6.2	Eng fix phase	5.96	7.69	6.19	8.25	8.21	8.18	7.21	6.64	5.79	6.48	7.31	8.03	6.41
6.3	Weapons fix phase	6.92	6.65	5.59	8.76	5.59	6.81	5.95	8.42	8.77	6.69	7.21	6.96	5.91
6.4	Comm/Nav fix phase	9.81	9.23	8.74	10.38	11.16	10.48	11.17	12.85	11.05	8.48	8.38	9.65	9.62
6.5	E/E fix phase	6.99	6.29	7.27	6.11	7.65	7.39	8.04	6.90	5.85	6.09	7.32	6.12	6.35
6.6	EW fix phase	6.99	7.46	6.68	7.73	6.30	7.21	7.25	5.59	7.69	7.33	5.65	7.18	6.34
6.7	Hydraulic fix phase	6.29	8.73	6.57	7.34	5.72	5.80	7.51	7.81	6.04	5.82	6.08	8.04	7.34
6.8	Sensors fix phase	6.60	6.11	7.77	5.76	6.16	7.59	6.54	6.75	7.15	7.38	7.13	6.77	6.53
6.9	Corrosion fix phase	7.18	5.79	7.44	7.41	7.00	6.79	5.95	6.24	7.40	5.88	6.90	7.84	6.43
6.10	GCS fix phase	5.87	8.99	7.25	6.12	6.11	6.70	7.76	7.35	7.55	6.88	6.65	6.22	6.15
6.11	NDI fix phase	6.79	5.98	7.02	5.84	7.54	6.43	6.28	8.33	6.32	6.76	7.54	7.32	7.16
7	Day 5 (Thur)													
7.1	ISO - APG fix/repanel	13.47	11.12	12.79	11.48	13.06	12.36	12.42	12.36	14.62	13.51	13.08	12.88	12.73
7.2	Eng fix/repanel	8.12	6.34	6.85	6.39	6.21	7.67	6.35	6.09	6.56	6.19	6.95	6.70	6.02
7.3	Comm/Nav complete	9.29	8.56	9.18	10.13	10.66	11.69	11.18	9.06	9.80	9.23	9.05	11.78	8.99
7.4	E/E complete	6.10	5.73	8.17	7.35	7.67	5.79	6.45	6.57	5.72	8.23	5.95	6.80	5.70
7.5	EW complete	7.09	6.00	7.14	8.00	7.49	6.38	7.06	6.21	6.35	5.95	6.10	6.44	6.37
7.6	Hydraulic fix complete	6.02	6.63	7.29	5.78	7.19	6.65	6.87	6.24	5.67	6.48	5.77	5.60	5.60
7.7	Sensors fix complete	6.58	6.74	6.19	6.05	7.80	6.86	7.02	7.23	5.60	7.49	7.72	5.98	7.79
7.8	Corrosion fix complete	8.68	5.88	6.23	6.83	8.50	6.57	6.51	7.29	6.11	7.23	8.38	6.47	7.11
7.9	GCS fix complete	6.69	7.66	7.27	5.59	6.58	6.49	7.90	7.38	6.42	6.50	6.12	6.58	6.70
8	Day 6 (Fri) Post ISO													
8.1	Remove workstands	0.77	0.85	0.93	0.89	0.77	0.87	0.85	0.94	0.81	0.81	0.86	0.75	0.95
8.2	Down jack aircraft	0.76	0.85	0.82	0.77	0.85	0.80	0.91	0.76	0.79	0.85	0.91	0.97	0.72
8.3	Tow aircraft to flightline	0.67	0.64	0.56	0.53	0.68	0.75	0.54	0.60	0.58	0.56	0.63	0.77	0.69
8.4	Aircraft refueled	0.90	0.72	0.86	1.15	0.87	0.79	0.80	0.90	0.78	0.81	0.89	0.94	1.00
8.5	Engines prop leak checks	3.89	2.96	2.81	3.55	2.85	3.21	3.69	3.50	3.45	3.22	3.01	4.36	2.95
8.6	Weapons ops checks	3.41	2.85	3.86	3.46	2.97	3.43	4.15	3.48	3.44	3.60	3.02	4.07	3.01
8.7	Comm/Nav ops checks	1.92	1.85	2.14	1.53	1.64	1.93	1.99	1.90	1.56	1.71	2.03	1.58	2.19
8.8	EW ops checks	4.41	5.02	4.31	5.04	4.50	5.44	4.72	4.32	5.36	6.05	6.40	5.25	5.22
8.9	Sensors ops checks	3.24	2.98	4.07	3.44	4.41	3.68	3.29	3.11	3.63	3.17	2.81	3.25	3.02
8.10	GCS ops checks	3.32	3.99	3.61	3.06	3.45	3.11	3.21	2.93	3.49	3.94	3.81	2.80	3.60
8.11	Hydraulic leak checks	1.67	1.54	1.70	1.57	1.41	1.66	2.11	1.91	1.85	1.60	1.48	1.75	1.53
9	Day 7 (Sat) Post ISO													
9.1	Engine performance runs	7.46	7.58	6.03	6.89	7.43	6.60	8.06	6.07	7.61	6.30	7.78	5.78	6.63
9.2	Fuel cell fix phase	10.52	11.01	9.46	9.05	8.59	10.40	10.16	12.80	10.18	10.56	11.78	9.22	11.66
9.3	ISO end	0.00	0.00	0.00	0.00	0.00	0.00	0.00	0.00	0.00	0.00	0.00	0.00	0.00

WBS	TASK	63	64	65	66	67	68	69	70	71	72	73	74	75
1	Pre ISO prep (Fri)													
1.1	ISO Start	0.00	0.00	0.00	0.00	0.00	0.00	0.00	0.00	0.00	0.00	0.00	0.00	0.00
1.2	Defuel aircraft	0.78	0.85	0.80	0.77	0.97	0.73	1.05	0.76	0.80	1.14	0.96	0.83	0.87
1.3	Depanel for ISO wash	1.48	1.73	1.41	1.56	1.51	1.68	1.68	1.67	1.74	1.77	1.49	1.42	1.95
2	Pre ISO prep (Sat)													
2.1	Tow aircraft to washrack	0.75	0.72	0.56	0.76	0.62	0.62	0.58	0.80	0.56	0.61	0.61	0.64	0.77
2.2	Wash aircraft	7.83	6.72	6.98	8.49	6.33	7.67	7.30	5.96	5.80	6.10	7.22	6.61	5.63
2.3	Tow aircraft to hanger	0.80	0.60	0.65	0.71	0.78	0.68	0.67	0.66	0.60	0.56	0.60	0.59	0.56
3	Day 1 (Sun)													
3.1	Jack aircraft	1.50	1.07	1.22	1.19	1.43	1.11	1.17	1.35	1.27	1.21	1.21	1.54	1.40
3.2	Set up stands	0.63	0.61	0.71	0.58	0.63	0.75	0.62	0.68	0.60	0.57	0.65	0.58	0.64
3.3	Depanel aircraft	2.47	2.92	2.37	2.99	2.53	2.51	2.66	2.51	2.30	2.55	3.09	2.26	2.16
3.4	Critical engine inspection	7.17	6.97	5.83	5.93	7.57	7.87	7.72	7.18	7.39	6.92	5.53	7.33	6.79
4	Day 2 (Mon)													
4.1	ISO APG Look/Lube phase	13.74	15.81	15.06	13.86	13.38	14.95	12.39	11.55	13.63	13.44	13.63	16.83	12.48
4.2	Engine look phase	7.57	8.37	8.48	7.30	7.22	6.04	6.74	6.48	7.39	7.46	8.57	6.24	8.38
4.3	Weapons look phase	19.85	17.75	22.98	16.33	16.70	17.78	15.95	17.61	14.58	21.48	18.85	22.94	17.64
4.4	Apply electrical power	0.00	0.00	0.00	0.00	0.00	0.00	0.00	0.00	0.00	0.00	0.00	0.00	0.00
4.4	Comm/Nav look phase	15.11	14.04	14.12	14.12	15.44	12.44	15.69	14.95	14.15	11.73	13.35	16.88	14.69
4.5	E/E look phase	12.74	14.20	13.91	12.05	11.30	12.22	15.24	13.09	15.07	12.08	14.01	14.26	13.14
4.6	EW look phase	5.10	4.99	4.74	6.07	4.88	4.58	4.32	6.70	4.66	5.15	4.39	5.15	4.61
4.7	Hydraulic look phase	12.80	12.55	13.39	13.68	12.05	11.13	15.88	12.40	13.56	14.05	12.99	15.62	14.96
4.8	Sensor look phase	6.42	5.90	4.31	5.21	5.74	5.01	4.66	5.00	4.77	5.27	4.64	4.62	5.71
4.9	Corrosion look phase	5.97	6.92	6.32	6.26	5.35	5.24	5.81	6.82	5.94	5.86	6.83	5.78	5.53
4.10	GCS look phase	6.97	7.28	5.56	6.96	5.34	7.03	5.96	6.18	5.95	6.46	5.70	5.53	4.93
4.11	NDI look phase	5.47	4.73	5.63	5.92	4.74	5.57	4.64	4.71	4.63	4.44	5.00	5.23	4.72
4.12	Fuel cell look phase	0.70	1.05	0.89	0.83	0.74	0.70	0.99	0.77	0.73	0.99	0.85	0.78	0.86
5	Day y 3 (Tue)													
5.1	ISO APG Lube/fix phase	12.75	13.26	16.64	12.23	13.82	12.19	13.38	11.25	13.84	13.55	11.83	15.13	13.73
5.2	Remove electrical power	0.00	0.00	0.00	0.00	0.00	0.00	0.00	0.00	0.00	0.00	0.00	0.00	0.00
5.2	Engine fix phase	6.66	7.58	7.70	7.67	8.63	6.00	6.91	7.91	6.40	7.55	7.28	6.49	5.96
5.3	Weapons fix phase	6.14	8.01	7.54	6.58	6.75	6.11	5.97	8.93	7.92	7.37	7.25	6.88	8.72
5.4	Comm/Nav fix phase	9.14	10.30	11.32	11.58	10.93	10.45	8.94	9.46	10.71	8.81	10.89	11.09	9.60
5.5	E/E fix phase	6.64	8.15	5.85	7.02	6.41	8.08	5.87	5.43	7.10	6.53	5.79	8.20	5.73
5.6	EW fix phase	7.77	5.98	5.68	6.72	6.93	5.71	8.35	5.69	6.05	5.87	6.87	5.69	5.82
5.7	Hydraulic fix phase	6.84	5.76	6.26	5.99	5.69	6.95	7.20	7.83	5.64	5.82	5.92	5.33	6.29
5.8	Sensors fix phase	6.11	6.55	6.52	6.41	8.25	7.51	7.50	6.13	6.40	6.39	7.57	8.91	6.72
5.9	Corrosion fix phase	5.57	5.87	5.62	6.41	6.53	7.12	6.61	5.91	8.22	5.78	6.43	6.91	6.59
5.10	GCS fix phase	7.13	7.98	6.45	6.00	6.88	8.04	7.43	7.21	6.19	5.64	6.64	7.30	8.53
5.11	NDI fix phase	7.78	5.64	7.03	5.86	6.60	6.95	5.89	8.27	5.68	5.67	8.68	5.86	6.50
6	Day 4 (Wed)													
6.1	ISO - APG fix phase	12.70	14.69	11.87	14.64	15.92	12.07	11.79	13.71	12.12	14.10	13.15	11.91	13.77
6.2	Eng fix phase	6.49	7.62	5.95	7.33	6.97	5.96	5.70	7.61	6.59	7.15	6.47	5.71	5.91
6.3	Weapons fix phase	6.98	6.71	5.98	5.57	7.07	8.68	8.79	6.21	6.09	6.66	6.62	6.95	6.50
6.4	Comm/Nav fix phase	9.08	8.32	8.69	10.40	12.79	9.53	9.30	11.44	12.26	9.61	10.47	9.11	8.88
6.5	E/E fix phase	6.88	6.80	7.42	6.08	8.17	8.18	6.07	6.56	7.13	8.45	7.82	7.34	5.62
6.6	EW fix phase	6.86	6.72	7.39	8.01	7.39	7.32	6.57	7.53	5.72	5.63	6.73	7.18	6.36
6.7	Hydraulic fix phase	5.93	6.69	5.88	8.77	7.69	6.37	6.05	7.10	5.67	8.17	7.03	6.30	7.27
6.8	Sensors fix phase	5.79	6.42	6.69	5.88	8.02	6.29	7.72	8.74	7.22	5.86	7.82	6.52	7.84
6.9	Corrosion fix phase	7.23	6.90	6.39	7.70	5.88	7.18	5.89	6.25	7.21	5.89	5.85	6.59	7.00
6.10	GCS fix phase	6.36	6.64	6.53	6.19	7.15	6.25	5.84	5.77	7.48	7.30	6.18	6.51	6.81
6.11	NDI fix phase	6.82	6.48	6.34	8.53	6.60	7.63	6.74	5.80	7.10	7.25	8.08	7.66	6.28
7	Day 5 (Thur)													
7.1	ISO - APG fix/repanel	15.86	14.89	12.88	15.81	13.05	13.80	13.85	13.41	13.56	11.66	14.11	13.71	13.96
7.2	Eng fix/repanel	6.23	6.16	5.77	7.78	6.62	7.18	6.88	6.13	5.63	7.09	6.19	7.61	5.83
7.3	Comm/Nav complete	8.63	10.61	10.35	9.82	8.51	10.42	8.49	8.91	10.11	8.67	12.39	9.11	11.00
7.4	E/E complete	6.50	6.01	7.69	6.97	6.09	8.12	7.19	7.19	7.05	8.58	8.08	7.27	7.43
7.5	EW complete	6.94	5.96	6.95	7.78	7.50	6.08	6.57	5.86	8.46	5.99	6.78	5.66	6.05
7.6	Hydraulic fix complete	5.87	7.09	5.64	7.33	6.82	7.24	6.60	7.15	6.63	7.31	6.67	6.77	6.16
7.7	Sensors fix complete	7.27	5.75	6.80	6.35	7.87	7.95	8.31	6.88	5.82	6.82	5.79	6.85	6.69
7.8	Corrosion fix complete	5.93	6.15	7.54	6.41	6.22	7.30	8.21	7.14	8.67	6.44	7.42	6.07	5.70
7.9	GCS fix complete	7.69	6.63	7.33	7.06	7.22	7.43	6.98	7.86	6.69	6.76	7.63	7.69	5.98
8	Day 6 (Fri) Post ISO													
8.1	Remove workstands	0.92	0.98	0.89	0.77	0.89	0.99	0.77	0.90	0.90	0.75	0.89	0.95	0.82
8.2	Down jack aircraft	0.87	0.79	0.93	0.78	0.82	0.92	0.92	1.08	0.81	0.80	1.01	0.83	0.86
8.3	Tow aircraft to flightline	0.55	0.70	0.70	0.66	0.55	0.57	0.59	0.64	0.59	0.55	0.68	0.73	0.61
8.4	Aircraft refueled	0.75	0.70	0.77	0.82	0.79	0.78	0.81	0.99	0.78	0.88	0.70	1.00	0.79
8.5	Engines prop leak checks	3.68	3.89	3.64	3.00	3.47	2.81	3.65	2.82	3.53	3.32	3.62	3.05	3.28
8.6	Weapons ops checks	3.05	3.83	3.02	3.50	3.29	3.93	3.77	2.89	2.91	3.45	2.81	3.76	3.16
8.7	Comm/Nav ops checks	1.96	1.71	1.48	1.51	2.13	2.07	1.91	1.72	1.62	1.84	1.69	1.74	1.45
8.8	EW ops checks	6.72	5.64	4.94	4.97	4.40	4.35	5.48	5.63	5.13	4.25	4.64	5.63	5.30
8.9	Sensors ops checks	3.73	3.37	3.01	3.46	3.79	3.16	3.12	2.79	3.60	3.11	2.96	3.39	3.58
8.10	GCS ops checks	3.76	2.84	3.12	3.28	3.29	2.78	4.04	4.09	3.13	2.90	3.01	3.66	3.91
8.11	Hydraulic leak checks	1.58	2.06	1.72	2.05	2.03	1.91	2.06	1.62	1.70	2.16	1.60	1.50	1.48
9	Day 7 (Sat) Post ISO													
9.1	Engine performance runs	7.04	7.31	6.53	6.85	6.25	7.11	7.15	6.07	8.68	5.54	5.69	7.22	7.80
9.2	Fuel cell fix phase	10.69	11.02	10.18	11.13	9.57	9.54	10.27	10.93	8.90	11.51	9.64	11.99	9.42
9.3	ISO end	0.00	0.00	0.00	0.00	0.00	0.00	0.00	0.00	0.00	0.00	0.00	0.00	0.00

WBS	TASK	76	77	78	79	80	81	82	83	84	85	86	87	88
1	Pre ISO prep (Fri)													
1.1	ISO Start	0.00	0.00	0.00	0.00	0.00	0.00	0.00	0.00	0.00	0.00	0.00	0.00	0.00
1.2	Defuel aircraft	0.96	0.87	0.80	0.94	0.90	0.89	1.06	0.98	0.85	0.80	0.83	0.89	1.05
1.3	Depanel for ISO wash	1.50	1.77	1.53	1.73	1.85	1.52	1.56	1.99	1.50	1.51	1.95	1.51	1.76
2	Pre ISO prep (Sat)													
2.1	Tow aircraft to washrack	0.58	0.58	0.63	0.58	0.67	0.55	0.64	0.61	0.56	0.59	0.69	0.54	0.68
2.2	Wash aircraft	6.97	5.94	5.56	6.40	6.40	6.14	8.12	7.01	8.02	6.58	6.74	6.28	7.48
2.3	Tow aircraft to hanger	0.56	0.69	0.55	0.58	0.73	0.80	0.58	0.58	0.76	0.66	0.58	0.64	0.69
3	Day 1 (Sun)													
3.1	Jack aircraft	1.29	1.47	1.42	1.30	1.16	1.15	1.23	1.61	1.32	1.07	1.22	1.18	1.11
3.2	Set up stands	0.54	0.84	0.54	0.59	0.68	0.70	0.59	0.63	0.72	0.64	0.65	0.81	0.53
3.3	Depanel aircraft	2.50	2.63	2.12	2.15	2.45	2.60	2.54	2.58	2.56	2.10	3.06	2.21	2.22
3.4	Critical engine inspection	7.34	6.28	8.00	8.63	6.49	7.10	6.71	7.65	7.03	7.25	6.11	5.71	8.30
4	Day 2 (Mon)													
4.1	ISO APG Look/Lube phase	11.90	13.24	11.33	11.52	17.21	12.26	15.23	11.26	14.79	12.83	15.97	12.24	15.79
4.2	Engine look phase	6.48	6.94	7.40	7.45	8.03	5.99	8.35	5.88	7.29	7.26	7.64	5.74	6.96
4.3	Weapons look phase	15.76	15.99	18.57	19.26	17.48	22.59	22.26	15.58	17.39	18.04	23.08	20.58	16.44
4.4	Apply electrical power	0.00	0.00	0.00	0.00	0.00	0.00	0.00	0.00	0.00	0.00	0.00	0.00	0.00
4.4	Comm/Nav look phase	13.08	16.79	11.15	14.19	13.41	13.15	12.94	17.45	11.62	14.59	14.74	12.85	13.18
4.5	E/E look phase	16.44	13.29	16.60	12.79	15.58	14.92	12.64	12.36	14.40	12.61	12.87	12.07	14.39
4.6	EW look phase	5.59	5.59	5.08	4.53	4.44	5.16	5.35	4.91	4.38	4.64	4.32	4.94	4.76
4.7	Hydraulic look phase	11.41	11.96	11.15	14.55	12.27	12.84	12.17	13.45	11.40	14.06	13.75	13.15	14.72
4.8	Sensor look phase	4.81	5.58	4.84	4.74	5.61	5.36	5.00	5.04	6.08	5.40	5.47	4.81	5.06
4.9	Corrosion look phase	6.83	4.93	5.50	6.77	5.29	6.87	6.76	5.25	5.62	6.37	5.98	5.22	5.66
4.10	GCS look phase	6.69	6.58	6.13	7.07	6.39	6.15	6.41	6.01	5.50	6.86	6.27	5.20	5.36
4.11	NDI look phase	4.48	4.74	5.07	4.63	4.97	5.11	5.27	5.97	4.74	4.44	6.67	5.94	6.20
4.12	Fuel cell look phase	0.75	1.05	0.78	0.72	1.05	0.85	1.03	0.83	0.84	0.78	0.86	0.99	0.72
5	Day y 3 (Tue)													
5.1	ISO APG Lube/fix phase	14.41	15.74	11.78	11.22	12.01	12.79	14.38	14.21	12.42	13.62	11.58	14.20	12.36
5.2	Remove electrical power	0.00	0.00	0.00	0.00	0.00	0.00	0.00	0.00	0.00	0.00	0.00	0.00	0.00
5.2	Engine fix phase	5.84	8.11	5.72	7.90	7.94	8.05	7.19	8.29	6.86	7.32	6.19	8.03	6.63
5.3	Weapons fix phase	6.40	6.77	5.59	8.89	8.94	7.17	6.33	8.78	7.52	7.66	6.75	6.81	6.53
5.4	Comm/Nav fix phase	10.34	8.85	10.31	11.83	11.40	12.65	12.71	11.77	8.50	11.29	9.33	13.26	10.10
5.5	E/E fix phase	6.64	6.04	6.48	6.90	5.44	6.01	5.97	6.65	5.92	6.89	8.17	6.61	6.41
5.6	EW fix phase	6.22	7.13	6.34	8.91	6.45	6.40	6.29	8.17	6.62	7.20	6.07	6.73	7.65
5.7	Hydraulic fix phase	7.13	6.20	6.45	6.22	7.15	7.06	5.74	5.68	5.94	6.10	6.69	6.94	6.33
5.8	Sensors fix phase	6.25	6.25	7.56	6.82	6.49	6.15	6.46	7.89	7.39	6.12	7.24	8.11	5.59
5.9	Corrosion fix phase	6.77	8.18	7.19	6.19	6.54	7.37	7.50	7.39	7.26	6.62	7.32	5.85	7.26
5.10	GCS fix phase	5.87	6.67	8.94	6.15	7.36	6.71	6.20	6.42	6.50	8.39	5.59	6.17	5.58
5.11	NDI fix phase	7.21	9.08	6.02	5.85	8.27	6.45	7.41	5.82	8.12	7.24	5.95	6.33	6.12
6	Day 4 (Wed)													
6.1	ISO - APG fix phase	15.17	14.33	14.79	14.17	13.42	15.37	12.43	16.26	13.67	12.65	13.98	14.01	12.70
6.2	Eng fix phase	6.26	8.10	5.71	8.98	7.35	5.90	6.85	6.81	5.69	6.29	7.18	6.45	6.82
6.3	Weapons fix phase	7.00	7.04	6.97	6.14	8.54	6.67	5.88	7.64	7.77	8.88	5.58	6.52	5.59
6.4	Comm/Nav fix phase	9.24	12.88	13.49	9.58	9.13	12.12	9.74	9.60	11.88	8.89	11.01	9.64	10.06
6.5	E/E fix phase	6.36	7.85	6.46	6.55	7.43	8.08	6.13	6.00	7.09	6.14	8.01	7.88	6.88
6.6	EW fix phase	6.24	6.04	5.80	6.85	7.58	7.29	6.01	7.90	8.87	7.23	7.47	5.70	5.99
6.7	Hydraulic fix phase	7.66	6.24	5.66	7.49	6.42	6.46	6.95	6.37	5.73	8.76	5.96	7.41	6.05
6.8	Sensors fix phase	5.72	7.30	7.40	6.78	5.88	6.44	6.07	6.59	7.07	7.57	5.63	6.86	8.47
6.9	Corrosion fix phase	6.99	6.82	8.41	7.50	6.67	7.20	6.37	5.95	5.59	5.75	5.76	6.00	7.49
6.10	GCS fix phase	5.80	6.28	6.75	6.72	7.76	7.01	6.76	5.94	7.19	6.33	5.90	5.64	6.80
6.11	NDI fix phase	7.69	6.24	6.49	5.87	6.76	6.17	6.41	5.69	6.57	5.94	6.81	7.80	6.49
7	Day 5 (Thur)													
7.1	ISO - APG fix/repanel	16.45	12.88	11.85	12.37	13.77	15.71	14.66	15.79	13.14	12.60	13.97	14.12	12.71
7.2	Eng fix/repanel	7.42	6.52	6.77	8.34	6.60	5.75	6.34	5.55	7.62	6.59	7.17	7.36	6.03
7.3	Comm/Nav complete	8.57	10.09	9.29	10.42	9.32	10.96	9.63	11.14	9.57	10.01	10.91	8.77	9.22
7.4	E/E complete	7.11	8.02	7.54	7.57	7.39	6.21	6.10	7.71	7.89	6.00	8.00	7.42	6.54
7.5	EW complete	6.93	6.91	5.71	6.87	5.84	6.01	6.58	6.38	6.56	7.15	7.49	7.52	6.82
7.6	Hydraulic fix complete	6.65	5.86	6.40	6.62	6.04	6.13	8.11	7.08	6.72	6.57	6.08	6.29	6.34
7.7	Sensors fix complete	6.78	7.70	6.16	7.10	6.21	6.19	6.71	6.35	6.26	7.21	6.18	6.83	7.65
7.8	Corrosion fix complete	6.09	6.27	7.19	6.46	6.75	8.80	7.33	5.97	7.22	7.02	6.64	6.92	5.70
7.9	GCS fix complete	7.41	6.67	7.42	6.03	7.11	6.35	6.76	5.86	6.91	6.05	5.91	6.47	6.06
8	Day 6 (Fri) Post ISO													
8.1	Remove workstands	0.82	0.77	0.70	0.94	0.94	0.73	0.83	0.87	0.76	0.85	0.78	0.78	0.75
8.2	Down jack aircraft	0.89	0.96	0.90	0.91	0.96	0.94	0.81	0.99	0.87	0.82	0.77	0.74	0.88
8.3	Tow aircraft to flightline	0.67	0.58	0.60	0.65	0.58	0.59	0.62	0.86	0.69	0.67	0.87	0.63	0.56
8.4	Aircraft refueled	0.92	0.99	0.90	0.88	0.76	1.04	0.92	1.09	1.03	0.83	0.76	0.89	1.02
8.5	Engines prop leak checks	3.00	3.62	3.52	3.57	3.20	3.59	3.09	3.72	3.52	3.68	2.98	4.12	3.75
8.6	Weapons ops checks	3.51	2.84	3.25	3.05	3.97	3.05	3.60	4.26	3.83	4.19	3.43	4.17	2.90
8.7	Comm/Nav ops checks	2.03	1.49	1.88	1.59	1.61	1.94	1.90	1.60	1.88	1.68	1.74	1.76	1.87
8.8	EW ops checks	5.71	4.54	4.52	4.19	4.71	4.51	4.40	5.37	4.27	5.35	5.87	4.92	4.27
8.9	Sensors ops checks	2.91	3.58	3.16	3.04	4.07	3.31	3.73	3.08	3.02	3.01	3.01	3.36	3.95
8.10	GCS ops checks	3.00	3.05	3.03	3.24	3.92	4.72	2.87	3.32	3.49	3.76	4.20	2.89	3.53
8.11	Hydraulic leak checks	1.70	2.00	2.00	1.88	1.76	1.74	1.55	1.46	1.78	1.56	1.78	1.85	2.00
9	Day 7 (Sat) Post ISO													
9.1	Engine performance runs	7.23	5.63	6.30	5.78	6.43	6.28	6.40	6.58	6.62	6.42	7.93	7.19	7.10
9.2	Fuel cell fix phase	12.80	11.22	9.71	9.73	11.56	8.84	9.00	12.68	13.36	9.81	9.15	9.19	9.65
9.3	ISO end	0.00	0.00	0.00	0.00	0.00	0.00	0.00	0.00	0.00	0.00	0.00	0.00	0.00

WBS	TASK	89	90	91	92	93	94	95	96	97	98	99	100
1	Pre ISO prep (Fri)												
1.1	ISO Start	0.00	0.00	0.00	0.00	0.00	0.00	0.00	0.00	0.00	0.00	0.00	0.00
1.2	Defuel aircraft	0.85	0.80	0.78	0.94	0.96	0.85	0.72	0.81	0.81	0.94	0.90	0.70
1.3	Depanel for ISO wash	1.68	2.01	1.50	1.66	1.80	1.48	1.96	1.50	1.59	1.39	1.50	1.69
2	Pre ISO prep (Sat)												
2.1	Tow aircraft to washrack	0.58	0.72	0.64	0.63	0.54	0.70	0.75	0.66	0.73	0.65	0.59	0.57
2.2	Wash aircraft	6.01	7.04	6.80	5.68	7.10	5.89	7.65	7.72	6.64	6.20	8.00	8.55
2.3	Tow aircraft to hanger	0.59	0.59	0.61	0.67	0.54	0.68	0.62	0.57	0.62	0.67	0.58	0.65
3	Day 1 (Sun)												
3.1	Jack aircraft	1.51	1.21	1.62	1.40	1.33	1.04	1.16	1.18	1.20	1.63	1.49	1.66
3.2	Set up stands	0.64	0.82	0.58	0.75	0.53	0.60	0.62	0.56	0.75	0.75	0.62	0.55
3.3	Depanel aircraft	2.28	3.20	2.86	2.59	2.89	2.46	2.19	2.93	2.27	2.85	2.39	2.92
3.4	Critical engine inspection	7.43	6.64	8.15	8.12	8.16	7.45	5.76	7.87	6.52	7.05	7.20	6.89
4	Day 2 (Mon)												
4.1	ISO APG Look/Lube phase	15.56	14.28	12.26	14.76	16.04	14.51	12.51	12.07	11.60	14.09	17.77	14.92
4.2	Engine look phase	5.91	6.38	6.87	7.61	7.02	6.84	7.22	6.19	7.90	7.05	6.32	6.06
4.3	Weapons look phase	16.28	15.99	21.37	18.04	21.17	20.80	15.67	20.86	17.02	16.73	19.69	20.10
4.4	Apply electrical power	0.00	0.00	0.00	0.00	0.00	0.00	0.00	0.00	0.00	0.00	0.00	0.00
4.4	Comm/Nav look phase	13.10	12.25	13.77	13.49	15.05	15.88	13.45	12.38	16.89	16.36	11.81	14.07
4.5	E/E look phase	11.71	14.93	15.80	15.78	12.80	13.56	11.89	16.95	14.46	11.86	13.22	12.36
4.6	EW look phase	4.85	4.83	6.14	6.59	4.21	4.54	6.52	4.62	4.75	5.96	5.03	5.06
4.7	Hydraulic look phase	11.44	13.36	14.21	15.02	15.37	11.46	11.34	12.52	11.50	13.52	12.76	12.94
4.8	Sensor look phase	4.77	5.55	4.82	5.15	4.86	4.36	4.21	4.43	4.92	5.01	4.31	5.20
4.9	Corrosion look phase	5.05	6.46	6.30	5.29	5.58	6.84	5.34	5.52	4.97	6.96	6.66	6.76
4.10	GCS look phase	7.20	5.56	5.71	5.03	5.74	5.40	6.24	6.35	6.80	7.67	6.58	7.04
4.11	NDI look phase	6.15	5.11	4.51	6.15	4.59	5.38	4.77	5.09	4.89	6.39	5.64	5.65
4.12	Fuel cell look phase	0.72	0.79	1.02	0.90	0.75	0.70	0.79	1.00	0.82	0.81	0.99	0.78
5	Day y 3 (Tue)												
5.1	ISO APG Lube/fix phase	11.56	13.36	12.85	16.25	13.67	15.11	12.79	12.00	13.62	11.90	13.37	15.35
5.2	Remove electrical power	0.00	0.00	0.00	0.00	0.00	0.00	0.00	0.00	0.00	0.00	0.00	0.00
5.2	Engine fix phase	7.44	5.75	5.70	5.70	7.47	6.45	6.68	7.27	6.49	7.51	7.90	6.17
5.3	Weapons fix phase	6.26	6.81	7.48	6.53	6.97	6.65	7.03	7.72	7.34	6.98	7.67	6.84
5.4	Comm/Nav fix phase	10.20	11.08	9.85	10.82	9.13	12.22	9.70	8.64	11.46	9.06	9.24	13.27
5.5	E/E fix phase	5.22	5.75	6.69	5.57	5.53	6.87	5.60	5.65	6.90	5.56	5.44	6.31
5.6	EW fix phase	7.22	6.41	6.94	7.48	8.45	6.81	6.24	6.40	6.36	6.20	9.01	6.53
5.7	Hydraulic fix phase	7.35	6.81	6.25	6.63	6.47	6.26	6.49	5.52	6.21	6.64	7.03	6.11
5.8	Sensors fix phase	7.03	6.64	6.87	6.55	7.49	6.74	6.50	6.16	6.69	6.56	5.92	7.45
5.9	Corrosion fix phase	6.15	6.35	7.97	6.60	6.88	6.67	5.91	5.90	7.76	6.48	7.03	8.22
5.10	GCS fix phase	6.16	9.05	5.74	6.29	6.71	5.87	7.62	6.04	6.05	7.03	6.03	6.28
5.11	NDI fix phase	6.53	6.13	5.82	6.52	8.17	6.28	7.83	6.53	7.01	8.06	6.74	7.24
6	Day 4 (Wed)												
6.1	ISO - APG fix phase	13.48	15.20	11.19	13.44	12.44	13.06	12.05	15.60	13.66	12.63	13.18	13.27
6.2	Eng fix phase	6.56	6.16	6.44	5.98	8.20	6.18	6.99	6.92	6.25	8.29	6.72	5.90
6.3	Weapons fix phase	6.44	6.35	6.89	6.15	6.91	8.97	6.51	7.72	6.61	6.39	6.04	6.48
6.4	Comm/Nav fix phase	10.99	9.18	9.62	9.19	9.90	9.07	12.86	9.82	10.52	9.82	9.14	10.40
6.5	E/E fix phase	7.12	6.61	7.18	6.72	5.75	6.73	7.72	7.70	6.52	7.10	5.60	7.72
6.6	EW fix phase	7.50	6.60	7.03	6.70	7.17	7.80	6.00	6.77	8.38	8.37	6.29	5.87
6.7	Hydraulic fix phase	5.61	8.42	7.47	6.28	7.73	7.86	7.57	5.90	7.12	6.80	5.57	8.90
6.8	Sensors fix phase	7.98	7.44	7.35	7.28	6.93	7.30	6.57	7.27	6.69	7.11	8.05	7.22
6.9	Corrosion fix phase	5.94	6.20	6.29	6.41	5.95	7.19	7.93	6.66	7.41	7.23	7.46	6.01
6.10	GCS fix phase	7.44	6.16	6.97	7.06	7.37	7.10	6.32	7.42	6.54	6.18	6.32	6.30
6.11	NDI fix phase	5.69	6.38	6.41	6.73	7.31	5.56	7.24	7.72	7.49	6.83	5.98	6.75
7	Day 5 (Thur)												
7.1	ISO - APG fix/repanel	13.24	13.83	12.54	12.12	15.01	12.65	12.99	12.47	14.74	11.55	16.01	12.74
7.2	Eng fix/repanel	6.74	5.69	5.87	8.55	5.66	7.65	6.58	6.25	5.71	6.82	8.27	8.43
7.3	Comm/Nav complete	12.86	9.79	9.38	11.45	10.98	10.21	11.15	10.59	10.21	8.44	12.39	12.84
7.4	E/E complete	6.73	6.93	7.42	5.78	6.07	6.81	7.30	6.31	6.40	7.48	7.03	7.43
7.5	EW complete	9.03	7.57	7.97	5.98	6.98	8.20	5.90	5.82	6.80	5.90	6.50	5.79
7.6	Hydraulic fix complete	6.33	6.22	6.56	6.77	7.14	6.96	8.84	7.41	7.03	7.46	8.22	6.06
7.7	Sensors fix complete	5.70	6.36	6.35	6.24	5.89	7.56	6.99	6.88	8.36	7.23	6.56	5.75
7.8	Corrosion fix complete	8.81	7.93	7.21	6.10	7.58	7.45	6.50	6.76	6.14	6.69	7.40	5.87
7.9	GCS fix complete	7.64	8.47	8.28	8.24	5.77	6.63	6.44	6.91	6.28	7.66	7.71	6.95
8	Day 6 (Fri) Post ISO												
8.1	Remove workstands	1.11	0.69	0.85	0.83	0.81	0.94	0.76	0.77	0.71	0.95	1.05	0.98
8.2	Down jack aircraft	0.74	0.72	0.75	0.89	0.76	0.82	0.82	0.76	0.69	0.92	1.04	0.85
8.3	Tow aircraft to flightline	0.55	0.75	0.59	0.76	0.68	0.64	0.61	0.62	0.69	0.59	0.72	0.64
8.4	Aircraft refueled	0.74	0.71	0.88	0.77	0.75	0.86	0.87	0.91	0.84	0.91	0.77	0.89
8.5	Engines prop leak checks	4.16	2.94	4.49	3.15	3.11	3.35	3.41	3.18	3.61	3.74	3.28	3.13
8.6	Weapons ops checks	3.80	2.91	3.43	3.04	3.12	4.03	3.12	3.16	3.07	4.12	3.50	3.77
8.7	Comm/Nav ops checks	2.20	1.81	1.63	1.43	1.78	1.74	1.59	1.53	1.68	1.47	1.72	2.00
8.8	EW ops checks	5.51	5.00	4.35	4.26	5.16	5.67	4.52	5.72	6.51	4.35	6.37	4.93
8.9	Sensors ops checks	3.38	3.34	3.63	3.71	2.99	2.96	2.98	3.95	2.82	3.71	3.12	3.58
8.10	GCS ops checks	3.43	3.10	3.96	3.23	3.06	3.41	2.93	4.23	3.79	3.14	3.80	3.46
8.11	Hydraulic leak checks	1.51	1.57	1.61	1.61	2.11	1.74	1.95	1.43	2.10	2.01	1.45	1.73
9	Day 7 (Sat) Post ISO												
9.1	Engine performance runs	6.93	7.05	5.97	6.09	7.25	5.76	6.30	6.56	7.83	6.83	5.61	6.53
9.2	Fuel cell fix phase	10.13	13.97	9.20	9.60	10.94	10.12	8.83	10.86	11.75	8.95	13.63	10.23
9.3	ISO end	0.00	0.00	0.00	0.00	0.00	0.00	0.00	0.00	0.00	0.00	0.00	0.00

Appendix E. Simulation Results

Simulation	M1	M2	M3	Work	Simulation	M1	M2	M3	Work
1	211.90	144.00	100.22	2145.65	**51**	208.24	144.10	94.58	2071.83
2	209.27	141.42	97.74	2156.73	**52**	208.36	150.58	93.29	2143.42
3	209.52	140.92	89.17	2019.72	**53**	206.19	160.78	95.01	2070.68
4	208.46	144.10	92.21	2129.17	**54**	206.56	142.46	87.09	2081.32
5	207.77	142.38	90.78	2099.95	**55**	208.34	139.55	86.60	2019.72
6	207.38	139.30	90.53	2100.52	**56**	208.95	152.32	97.17	2191.00
7	206.76	141.99	88.20	2074.88	**57**	211.53	154.20	102.13	2167.02
8	209.77	151.94	100.83	2170.83	**58**	207.58	139.03	94.26	2093.47
9	206.91	159.86	95.29	2109.03	**59**	211.42	153.09	92.20	2061.43
10	207.22	151.36	89.72	2116.77	**60**	210.14	146.15	97.05	2165.38
11	208.70	140.20	95.24	2161.42	**61**	206.33	161.79	92.75	2143.48
12	206.25	159.94	93.83	2163.12	**62**	210.40	145.70	91.73	2075.02
13	207.30	160.09	94.21	2130.68	**63**	207.93	142.88	95.91	2115.83
14	210.10	163.02	97.31	2189.87	**64**	209.30	162.45	98.23	2202.03
15	206.69	159.80	93.53	2081.53	**65**	207.14	142.41	97.27	2149.53
16	210.46	152.55	97.36	2182.62	**66**	208.64	144.08	96.26	2192.67
17	209.98	145.15	97.15	2195.87	**67**	206.23	159.56	91.72	2169.15
18	213.28	144.50	103.88	2106.42	**68**	206.82	137.98	93.21	2077.48
19	207.88	143.69	85.61	2024.33	**69**	210.07	152.98	91.95	2057.63
20	207.31	161.25	95.78	2075.55	**70**	209.14	152.43	87.88	2047.73
21	212.35	143.58	102.91	2093.48	**71**	206.87	138.51	88.30	2088.58
22	209.34	152.64	90.96	2095.93	**72**	208.10	143.73	96.42	2067.27
23	208.93	161.09	96.44	2202.05	**73**	206.98	139.26	94.43	2123.27
24	209.79	152.31	94.39	2141.75	**74**	210.79	162.94	100.59	2186.07
25	208.33	160.53	94.81	2068.02	**75**	207.98	140.01	90.26	2084.42
26	208.94	140.06	98.12	2065.28	**76**	211.14	153.91	98.27	2140.77
27	207.07	138.33	90.95	2095.25	**77**	208.99	163.25	94.89	2170.32
28	206.30	137.13	89.92	2095.00	**78**	206.89	142.85	84.78	2017.22
29	206.72	137.86	93.70	2116.95	**79**	208.23	163.80	95.74	2091.25
30	208.37	160.56	97.64	2109.70	**80**	208.74	152.97	96.98	2172.28
31	206.30	142.03	95.30	2147.98	**81**	209.73	151.77	99.40	2176.73
32	207.54	159.57	92.40	2163.48	**82**	205.67	140.72	94.73	2168.82
33	210.70	164.21	98.35	2171.12	**83**	210.64	165.46	99.68	2188.68
34	207.36	138.42	92.40	2113.77	**84**	213.50	155.01	101.34	2115.38
35	208.47	140.18	92.94	2105.53	**85**	207.72	143.15	95.10	2076.15
36	207.52	161.65	97.75	2223.52	**86**	206.12	140.38	95.41	2151.72
37	206.86	138.11	89.03	2050.03	**87**	207.29	140.77	91.08	2110.17
38	209.36	151.61	96.84	2134.32	**88**	207.05	151.21	91.09	2081.22
39	208.53	144.41	89.21	2060.55	**89**	207.12	140.07	90.40	2108.23
40	210.59	152.73	96.07	2122.60	**90**	213.41	155.12	100.28	2135.03
41	209.27	144.56	95.83	2140.27	**91**	207.00	150.26	97.91	2021.13
42	210.98	164.31	99.30	2194.23	**92**	210.34	159.68	95.63	2174.12
43	209.58	150.91	101.46	2121.98	**93**	208.16	160.66	97.01	2186.35
44	210.88	154.78	97.77	2175.63	**94**	207.57	154.54	96.30	2140.17
45	208.37	139.19	90.82	2065.42	**95**	208.55	137.69	89.42	2047.52
46	208.37	150.45	93.70	2111.77	**96**	210.33	163.36	100.80	2070.83
47	206.23	141.81	88.01	2044.27	**97**	209.19	153.20	91.96	2105.80
48	208.84	151.51	93.62	2094.25	**98**	208.71	161.06	89.07	2062.27
49	206.75	138.11	88.47	2040.67	**99**	213.69	167.80	104.95	2253.93
50	208.70	161.48	99.27	2082.37	**100**	209.32	153.84	98.52	2201.53

Appendix F. Shapiro – Wilk W Test

Distributions

M1

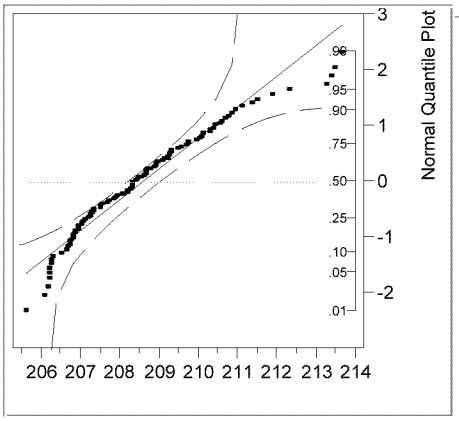

Normal(208.654,1.80089

Fitted Normal

Goodness-of-Fit Test

Shapiro-Wilk W Test

W	Prob<W
0.936889	0.0001

M2

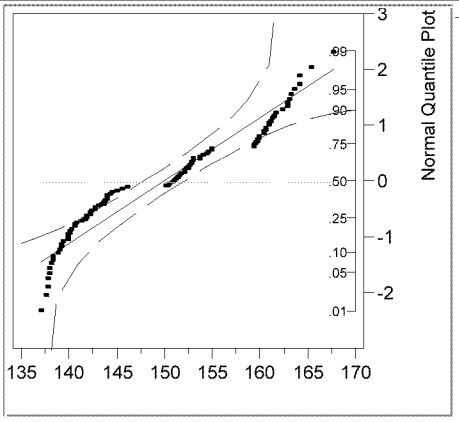

Normal(149.931,8.89819

Fitted Normal

Goodness-of-Fit Test

Shapiro-Wilk W Test

W	Prob<W
0.896559	<.0001

M3

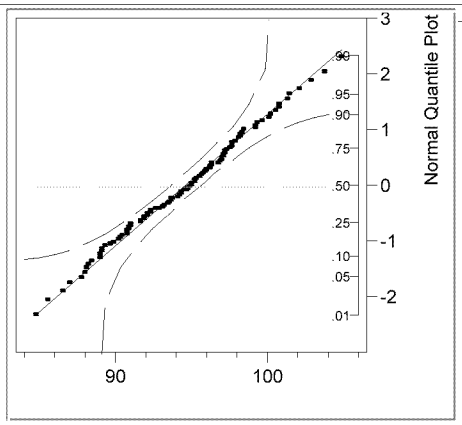

Normal(94.64,4.23768

Fitted Normal

Goodness-of-Fit Test

Shapiro-Wilk W Test

W	Prob<W
0.982517	0.6609

Appendix G. Friedman *Fr* Test Results

Simulation	M1	Rank	M2	Rank	M3	Rank	Simulation	M1	Rank	M2	Rank	M3	Rank
1	211.90	3	144.00	2	100.22	1	**58**	207.58	3	139.03	2	94.26	1
2	209.27	3	141.42	2	97.74	1	**59**	211.42	3	153.09	2	92.20	1
3	209.52	3	140.92	2	89.17	1	**60**	210.14	3	146.15	2	97.05	1
4	208.46	3	144.10	2	92.21	1	**61**	206.33	3	161.79	2	92.75	1
5	207.77	3	142.38	2	90.78	1	**62**	210.40	3	145.70	2	91.73	1
6	207.38	3	139.30	2	90.53	1	**63**	207.93	3	142.88	2	95.91	1
7	206.76	3	141.99	2	88.20	1	**64**	209.30	3	162.45	2	98.23	1
8	209.77	3	151.94	2	100.83	1	**65**	207.14	3	142.41	2	97.27	1
9	206.91	3	159.86	2	95.29	1	**66**	208.64	3	144.08	2	96.26	1
10	207.22	3	151.36	2	89.72	1	**67**	206.23	3	159.56	2	91.72	1
11	208.70	3	140.20	2	95.24	1	**68**	206.82	3	137.98	2	93.21	1
12	206.25	3	159.94	2	93.83	1	**69**	210.07	3	152.98	2	91.95	1
13	207.30	3	160.09	2	94.21	1	**70**	209.14	3	152.43	2	87.88	1
14	210.10	3	163.02	2	97.31	1	**71**	206.87	3	138.51	2	88.30	1
15	206.69	3	159.80	2	93.53	1	**72**	208.10	3	143.73	2	96.42	1
16	210.46	3	152.55	2	97.36	1	**73**	206.98	3	139.26	2	94.43	1
17	209.98	3	145.15	2	97.15	1	**74**	210.79	3	162.94	2	100.59	1
18	213.28	3	144.50	2	103.88	1	**75**	207.98	3	140.01	2	90.26	1
19	207.88	3	143.69	2	85.61	1	**76**	211.14	3	153.91	2	98.27	1
20	207.31	3	161.25	2	95.78	1	**77**	208.99	3	163.25	2	94.89	1
21	212.35	3	143.58	2	102.91	1	**78**	206.89	3	142.85	2	84.78	1
22	209.34	3	152.64	2	90.96	1	**79**	208.23	3	163.80	2	95.74	1
23	208.93	3	161.09	2	96.44	1	**80**	208.74	3	152.97	2	96.98	1
24	209.79	3	152.31	2	94.39	1	**81**	209.73	3	151.77	2	99.40	1
25	208.33	3	160.53	2	94.81	1	**82**	205.67	3	140.72	2	94.73	1
26	208.94	3	140.06	2	98.12	1	**83**	210.64	3	165.46	2	99.68	1
27	207.07	3	138.33	2	90.95	1	**84**	213.50	3	155.01	2	101.34	1
28	206.30	3	137.13	2	89.92	1	**85**	207.72	3	143.15	2	95.10	1
29	206.72	3	137.86	2	93.70	1	**86**	206.12	3	140.38	2	95.41	1
30	208.37	3	160.56	2	97.64	1	**87**	207.29	3	140.77	2	91.08	1
31	206.30	3	142.03	2	95.30	1	**88**	207.05	3	151.21	2	91.09	1
32	207.54	3	159.57	2	92.40	1	**89**	207.12	3	140.07	2	90.40	1
33	210.70	3	164.21	2	98.35	1	**90**	213.41	3	155.12	2	100.28	1
34	207.36	3	138.42	2	92.40	1	**91**	207.00	3	150.26	2	97.91	1
35	208.47	3	140.18	2	92.94	1	**92**	210.34	3	159.68	2	95.63	1
36	207.52	3	161.65	2	97.75	1	**93**	208.16	3	160.66	2	97.01	1
37	206.86	3	138.11	2	89.03	1	**94**	207.57	3	154.54	2	96.30	1
38	209.36	3	151.61	2	96.84	1	**95**	208.55	3	137.69	2	89.42	1
39	208.53	3	144.41	2	89.21	1	**96**	210.33	3	163.36	2	100.80	1
40	210.59	3	152.73	2	96.07	1	**97**	209.19	3	153.20	2	91.96	1
41	209.27	3	144.56	2	95.83	1	**98**	208.71	3	161.06	2	89.07	1
42	210.98	3	164.31	2	99.30	1	**99**	213.69	3	167.80	2	104.95	1
43	209.58	3	150.91	2	101.46	1	**100**	209.32	3	153.84	2	98.52	1
44	210.88	3	154.78	2	97.77	1			$R_1 = 300$		$R_2 = 200$		$R_3 = 100$
45	208.37	3	139.19	2	90.82	1	**b** = 100						**p** = 3
46	208.37	3	150.45	2	93.70	1							
47	206.23	3	141.81	2	88.01	1							
48	208.84	3	151.51	2	93.62	1							
49	206.75	3	138.11	2	88.47	1							
50	208.70	3	161.48	2	99.27	1							
51	208.24	3	144.10	2	94.58	1							
52	208.36	3	150.58	2	93.29	1							
53	206.19	3	160.78	2	95.01	1							
54	206.56	3	142.46	2	87.09	1							
55	208.34	3	139.55	2	86.60	1							
56	208.95	3	152.32	2	97.17	1							
57	211.53	3	154.20	2	102.13	1							

$$F_r := \frac{12}{b \cdot p \cdot (p+1)} \cdot \sum_{j=1}^{p} \left(R_j\right)^2 - 3 \cdot b \cdot (p+1)$$

$$Fr = 200, \quad \chi^2_{.01} = 10.5966$$

Appendix H. Simulation Results Ascending Order

#	M1	M2	M3	#	M1	M2	M3
1	205.67	137.13	84.78	**51**	208.46	151.21	95.01
2	206.12	137.69	85.61	**52**	208.47	151.36	95.10&&&
3	206.19	137.86	86.60	**53**	208.53	151.51	95.24
4	206.23	137.98	87.09	**54**	208.55	151.61	95.29
5	206.23	138.11	87.88	**55**	208.64	151.77	95.30
6	206.25	138.11	88.01	**56**	208.70	151.94	95.41
7	206.30	138.33	88.20	**57**	208.70	152.31	95.63
8	206.30	138.42	88.30	**58**	208.71	152.32	95.74
9	206.33	138.51	88.47	**59**	208.74	152.43	95.78
10	206.56	139.03	89.03	**60**	208.84	152.55	95.83
11	206.69	139.19	89.07	**61**	208.93	152.64	95.91
12	206.72	139.26	89.17	**62**	208.94	152.73	96.07
13	206.75	139.30	89.21	**63**	208.95	152.97	96.26
14	206.76	139.55	89.42	**64**	208.99	152.98	96.30
15	206.82	140.01	89.72	**65**	209.14	153.09	96.42
16	206.86	140.06	89.92	**66**	209.19	153.20	96.44
17	206.87	140.07	90.26	**67**	209.27	153.84	96.84
18	206.89	140.18	90.40	**68**	209.27	153.91	96.98
19	206.91	140.20	90.53	**69**	209.30	154.20	97.01
20	206.98	140.38	90.78	**70**	209.32	154.54	97.05
21	207.00	140.72	90.82	**71**	209.34	154.78	97.15
22	207.05	140.77	90.95	**72**	209.36	155.01	97.17
`23	207.07	140.92	90.96	**73**	209.52	155.12&&	97.27
24	207.12	141.42	91.08	**74**	209.58	159.56	97.31
25	207.14	141.81	91.09	**75**	209.73	159.57	97.36
26	207.22	141.99	91.72	**76**	209.77	159.68	97.64
27	207.29	142.03	91.73	**77**	209.79	159.80	97.74
28	207.30	142.38	91.95	**78**	209.98	159.86	97.75
29	207.31	142.41	91.96	**79**	210.07	159.94	97.77
30	207.36	142.46	92.20	**80**	210.10	160.09	97.91
31	207.38	142.85	92.21	**81**	210.14	160.53	98.12
32	207.52	142.88	92.40	**82**	210.33	160.56	98.23
33	207.54	143.15	92.40	**83**	210.34	160.66	98.27
34	207.57	143.58	92.75	**84**	210.40	160.78	98.35
35	207.58	143.69	92.94	**85**	210.46	161.06	98.52
36	207.72	143.73	93.21	**86**	210.59	161.09	99.27
37	207.77	144.00	93.29	**87**	210.64	161.25	99.30
38	207.88	144.08	93.53	**88**	210.70	161.48	99.40
39	207.93	144.10	93.62	**89**	210.79	161.65	99.68
40	207.98	144.10	93.70	**90**	210.88	161.79	100.22
41	208.10	144.41	93.70	**91**	210.98	162.45	100.28
42	208.16	144.50	93.83	**92**	211.14	162.94	100.59
43	208.23	144.56	94.21	**93**	211.42	163.02	100.80
44	208.24	145.15	94.26	**94**	211.53	163.25	100.83
45	208.33	145.70	94.39	**95**	211.90*	163.36	101.34
46	208.34	146.15	94.43	**96**	212.35	163.80	101.46
47	208.36	150.26	94.58	**97**	213.28	164.21	102.13
48	208.37	150.45	94.73	**98**	213.41	164.31	102.91
49	208.37	150.58	94.81	**99**	213.50	165.46	103.88
50	208.37	150.91	94.89	**100**	213.69	167.80**	104.95***
				Min	205.67	137.13	84.78
				Mean	208.65	149.93	94.64
				Max	213.69	167.80	104.95
				CP	212.00*	168.00**	109.27***
				CC Lower@	204.00	111.87	68.22
				CC Upper	237.00&	156.87&&	95.22&&&

* 212.00 hours > 95 of the 100 simulation results
** 168.00 hours > 100 of the 100 simulation results
*** 109.27 hours > 100 of the 100 simulation results
@ < 100 simulation results
& 237.00 hours > 100 of the 100 simulation results
&& 156.87 hours > 73 of the 100 simulation results
&&& 95.22 hours > 52 of the 100 simulation results

Appendix I. CP Aircraft Availability Lost and Aircraft Scheduling Lost

#	M1	M2	M3	#	M1	M2	M3
1	-6.33	-30.87	-24.49	**53**	-3.47	-16.49	-14.03
2	-5.88	-30.31	-23.66	**54**	-3.45	-16.39	-13.98
3	-5.81	-30.14	-22.67	**55**	-3.36	-16.23	-13.97
4	-5.77	-30.02	-22.18	**56**	-3.30	-16.06	-13.86
5	-5.77	-29.89	-21.39	**57**	-3.30	-15.69	-13.64
6	-5.75	-29.89	-21.26	**58**	-3.29	-15.68	-13.53
7	-5.70	-29.67	-21.07	**59**	-3.26	-15.57	-13.49
8	-5.70	-29.58	-20.97	**60**	-3.16	-15.45	-13.44
9	-5.67	-29.49	-20.80	**61**	-3.07	-15.36	-13.36
10	-5.44	-28.97	-20.24	**62**	-3.06	-15.27	-13.20
11	-5.31	-28.81	-20.20	**63**	-3.05	-15.03	-13.01
12	-5.28	-28.74	-20.10	**64**	-3.01	-15.02	-12.97
13	-5.25	-28.70	-20.06	**65**	-2.86	-14.91	-12.85
14	-5.24	-28.45	-19.85	**66**	-2.81	-14.80	-12.83
15	-5.18	-27.99	-19.55	**67**	-2.73	-14.16	-12.43
16	-5.14	-27.94	-19.35	**68**	-2.73	-14.09	-12.29
17	-5.13	-27.93	-19.01	**69**	-2.70	-13.80	-12.26
18	-5.11	-27.82	-18.87	**70**	-2.68	-13.46	-12.22
19	-5.09	-27.80	-18.74	**71**	-2.66	-13.22	-12.12
20	-5.02	-27.62	-18.49	**72**	-2.64	-12.99	-12.10
21	-5.00	-27.28	-18.45	**73**	-2.48	-12.88	-12.00
22	-4.95	-27.23	-18.32	**74**	-2.42	-8.44	-11.96
23	-4.93	-27.08	-18.31	**75**	-2.27	-8.43	-11.91
24	-4.88	-26.58	-18.19	**76**	-2.23	-8.32	-11.63
25	-4.86	-26.19	-18.18	**77**	-2.21	-8.20	-11.53
26	-4.78	-26.01	-17.55	**78**	-2.02	-8.14	-11.52
27	-4.71	-25.97	-17.54	**79**	-1.93	-8.06	-11.50
28	-4.70	-25.62	-17.32	**80**	-1.90	-7.91	-11.36
29	-4.69	-25.59	-17.31	**81**	-1.86	-7.47	-11.15
30	-4.64	-25.54	-17.07	**82**	-1.67	-7.44	-11.04
31	-4.62	-25.15	-17.06	**83**	-1.66	-7.34	-11.00
32	-4.48	-25.12	-16.87	**84**	-1.60	-7.22	-10.92
33	-4.46	-24.85	-16.87	**85**	-1.54	-6.94	-10.75
34	-4.43	-24.42	-16.52	**86**	-1.41	-6.91	-10.00
35	-4.42	-24.31	-16.33	**87**	-1.36	-6.75	-9.97
36	-4.28	-24.27	-16.06	**88**	-1.30	-6.52	-9.87
37	-4.23	-24.00	-15.98	**89**	-1.21	-6.35	-9.59
38	-4.12	-23.92	-15.74	**90**	-1.12	-6.21	-9.05
39	-4.07	-23.90	-15.65	**91**	-1.02	-5.55	-8.99
40	-4.02	-23.90	-15.57	**92**	-0.86	-5.06	-8.68
41	-3.90	-23.59	-15.57	**93**	-0.58	-4.98	-8.47
42	-3.84	-23.50	-15.44	**94**	-0.47	-4.75	-8.44
43	-3.77	-23.44	-15.06	**95**	-0.10	-4.64	-7.93
44	-3.76	-22.85	-15.01	**96**	0.35	-4.20	-7.81
45	-3.67	-22.30	-14.88	**97**	1.28	-3.79	-7.14
46	-3.66	-21.85	-14.84	**98**	1.41	-3.69	-6.36
47	-3.64	-17.74	-14.69	**99**	1.50	-2.54	-5.39
48	-3.63	-17.55	-14.54	**100**	1.69	-0.2	-4.32
49	-3.63	-17.42	-14.46	***Aircraft availability lost**	-340.85	-1806.92	-1463.00
50	-3.63	-17.09	-14.38				
51	-3.54	-16.79	-14.26	****Aircraft scheduling lost**	6.23	N/A	N/A
52	-3.53	-16.64	-14.17				

* Cumulative value for 100 simulations. Average (hours) was –3.59 (M1), -18.07 (M2), -14.63 (M3)

** Cumulative value for 100 simulations. Average (hours) was 1.25

Appendix J. CC Aircraft Availability Lost and Aircraft Scheduling Lost

#	M1		M2		M3	
	Upper	Lower	Upper	Lower	Upper	Lower
1	-31.33	1.67	-19.74	25.26	-10.44	16.56
2	-30.88	2.12	-19.18	25.82	-9.61	17.39
3	-30.81	2.19	-19.01	25.99	-8.62	18.38
4	-30.77	2.23	-18.89	26.11	-8.13	18.87
5	-30.77	2.23	-18.76	26.24	-7.34	19.66
6	-30.75	2.25	-18.76	26.24	-7.21	19.79
7	-30.70	2.30	-18.54	26.46	-7.02	19.98
8	-30.70	2.30	-18.45	26.55	-6.92	20.08
9	-30.67	2.33	-18.36	26.64	-6.75	20.25
10	-30.44	2.56	-17.84	27.16	-6.19	20.81
11	-30.31	2.69	-17.68	27.32	-6.15	20.85
12	-30.28	2.72	-17.61	27.39	-6.05	20.95
13	-30.25	2.75	-17.57	27.43	-6.01	20.99
14	-30.24	2.76	-17.32	27.68	-5.08	21.20
15	-30.18	2.82	-16.86	28.14	-5.50	21.50
16	-30.14	2.86	-16.81	28.19	-5.30	21.70
17	-30.13	2.87	-16.80	28.20	-4.96	22.04
18	-30.11	2.89	-16.69	28.31	-4.82	22.18
19	-30.09	2.91	-16.67	28.33	-4.69	22.31
20	-30.02	2.98	-16.49	28.51	-4.44	22.56
21	-30.00	3.00	-16.15	28.85	-4.40	22.60
22	-29.95	3.05	-16.10	28.90	-4.27	22.73
23	-29.93	3.07	-15.95	29.05	-4.26	22.74
24	-29.88	3.12	-15.45	29.55	-4.14	22.86
25	-29.86	3.14	-15.06	29.94	-4.13	22.87
26	-29.78	3.22	-14.88	30.12	-3.50	23.5
27	-29.71	3.29	-14.84	30.16	-3.49	23.51
28	-29.70	3.30	-14.49	30.51	-3.27	23.73
29	-29.69	3.31	-14.46	30.54	-3.26	23.74
30	-29.64	3.36	-14.41	30.59	-3.02	23.98
31	-29.62	3.38	-14.02	30.98	-3.01	23.99
32	-29.48	3.52	-13.99	31.01	-2.82	24.18
33	-29.46	3.54	-13.72	31.28	-2.82	24.18
34	-29.43	3.57	-13.29	31.71	-2.47	24.53
35	-29.42	3.58	-13.18	31.82	-2.28	24.72
36	-29.28	3.72	-13.14	31.86	-2.01	24.99
37	-29.23	3.77	-12.87	32.13	-1.93	25.07
38	-29.12	3.88	-12.79	32.21	-1.69	25.31
39	-29.07	3.93	-12.77	32.23	-1.60	25.40
40	-29.02	3.98	-12.77	32.23	-1.52	25.48
41	-28.90	4.10	-12.46	32.54	-1.52	25.48
42	-28.84	4.16	-12.37	32.63	-1.39	25.61
43	-28.77	4.23	-12.31	32.69	-1.01	25.99
44	-28.76	4.24	-11.72	33.28	-0.96	26.04
45	-28.67	4.33	-11.17	33.83	-0.83	26.17
46	-28.66	4.34	-10.72	34.28	-0.79	26.21
47	-28.64	4.36	-6.61	38.39	-0.64	26.36
48	-28.63	4.37	-6.42	38.58	-0.49	26.51
49	-28.63	4.37	-6.29	38.71	-0.41	26.59
50	-28.63	4.37	-5.96	39.04	-0.33	26.67
51	-28.54	4.46	-5.66	39.34	-0.21	26.79
52	-28.53	4.47	-5.51	39.49	-0.12	26.88
53	-28.47	4.53	-5.36	39.64	0.02	27.02
54	-28.45	4.55	-5.26	39.74	0.07	27.07
55	-28.36	4.64	-5.10	39.90	0.08	27.08

#	M1		M2		M3	
	Upper	Lower	Upper	Lower	Upper	Lower
56	-28.30	4.70	-4.93	40.07	0.19	27.19
57	-28.30	4.70	-4.56	40.44	0.41	27.41
58	-28.29	4.71	-4.55	40.45	0.52	27.52
59	-28.26	4.74	-4.44	40.56	0.56	27.56
60	-28.16	4.84	-4.32	40.68	0.61	27.61
61	-28.07	4.93	-4.23	40.77	0.69	27.69
62	-28.06	4.94	-4.14	40.86	0.85	27.85
63	-28.05	4.95	-3.90	41.10	1.04	28.04
64	-28.01	4.99	-3.89	41.11	1.08	28.08
65	-27.86	5.14	-3.78	41.22	1.20	28.20
66	-27.81	5.19	-3.67	41.33	1.22	28.22
67	-27.73	5.27	-3.03	41.97	1.62	28.62
68	-27.73	5.27	-2.96	42.04	1.76	28.76
69	-27.70	5.30	-2.67	42.33	1.79	28.79
70	-27.68	5.32	-2.33	42.67	1.83	28.83
71	-27.66	5.34	-2.09	42.91	1.93	28.93
72	-27.64	5.36	-1.86	43.14	1.95	28.95
73	-27.48	5.52	-1.75	43.25	2.05	29.05
74	-27.42	5.58	2.69	47.69	2.09	29.09
75	-27.27	5.73	2.70	47.70	2.14	29.14
76	-27.23	5.77	2.81	47.81	2.42	29.42
77	-27.21	5.79	2.93	47.93	2.52	29.52
78	-27.02	5.98	2.99	47.99	2.53	29.53
79	-26.93	6.07	3.07	48.07	2.55	29.55
80	-26.90	6.10	3.22	48.22	2.69	29.69
81	-26.86	6.14	3.66	48.66	2.90	29.90
82	-26.67	6.33	3.69	48.69	3.01	30.01
83	-26.66	6.34	3.79	48.79	3.05	30.05
84	-26.60	6.40	3.91	48.91	3.13	30.13
85	-26.54	6.46	4.19	49.19	3.30	30.30
86	-26.41	6.59	4.22	49.22	4.05	31.05
87	-26.36	6.64	4.38	49.38	4.08	31.08
88	-26.30	6.70	4.61	49.61	4.18	31.18
89	-26.21	6.79	4.78	49.78	4.46	31.46
90	-26.12	6.88	4.92	49.92	5.00	32.00
91	-26.02	6.98	5.58	50.58	5.06	32.06
92	-25.86	7.14	6.07	51.07	5.37	32.37
93	-25.58	7.42	6.15	51.15	5.58	32.58
94	-25.47	7.53	6.38	51.38	5.61	32.61
95	-25.10	7.90	6.49	51.49	6.12	33.12
96	-24.65	8.35	6.93	51.93	6.24	33.24
97	-23.72	9.28	7.34	52.34	6.91	33.91
98	-23.59	9.41	7.44	52.44	7.69	34.69
99	-23.50	9.50	8.59	53.59	8.66	35.66
100	-23.31	9.69	10.93	55.93	9.73	36.73
***Aircraft avail. lost**	-2834.62	N/A	-825.39	N/A	-200.54	N/A
Average	-28.35	N/A	-11.31	N/A	-3.86	N/A
***Aircraft sched. lost**	N/A	465.38	134.46	3806.08	142.54	2642.00
Average	N/A	4.65	4.98	38.06	2.97	26.42

* Cumulative value for 100 simulations.

Appendix K. CP1 WBS

* CP tasks

Line	WBS	Task	Line	WBS	Task
1	1	Pre ISO prep	41	6	Day 4
2	1.1	ISO Start	42	6.1	ISO - APG fix phase
3	1.2	Defuel aircraft	43	6.2	Eng fix phase
4	1.3	Depanel for ISO wash	44	6.3	Weapons fix phase
5	2	Pre ISO prep	45	6.4	Communication Navigation fix phase
6	2.1	Tow aircraft to washrack	46	6.5	Electric/Environmental fix phase
7	2.2	Wash aircraft	47	6.6	Electronic warfare fix phase
8	2.3	Tow aircraft to ISO hangar	48	6.7	Hydraulic fix phase
9	3	Day 1	49	6.8	Sensors fix phase
10	3.1	Jack aircraft	50	6.9	Corrosion fix phase
11	3.2	Set up stands	51	6.10	Guidance and Control fix phase
12	3.3	Depanel aircraft	52	6.11	Non Destructive Inspection fix phase
13	3.4	Critical engine inspection	53	7	Day 5
14	4	Day 2	54	7.1	ISO - APG fix/repanel
15	4.1	ISO APG Look/Lube phase	55	7.2	Eng fix/repanel
16	4.2	Engine look phase	56	7.3	Communication Navigation complete
17	4.3	Weapons look phase	57	7.4	Electric/Environmental complete
18	4.4	Apply electrical power	58	7.5	Electronic warfare complete
19	4.5	Communication/Navigation look phase	59	7.6	Hydraulic fix complete
20	4.6	Electric/Environmental look phase	60	7.7	Sensors fix complete
21	4.7	Electronic warfare look phase	61	7.8	Corrosion fix complete
22	4.8	Hydraulic look phase	62	7.9	Guidance and Control fix complete
23	4.9	Sensor's look phase	63	8	Day 6 Post ISO
24	4.10	Corrosion look phase	64	8.1	Remove workstands
25	4.11	Guidance and Control look phase	65	8.2	Down jack aircraft
26	4.12	Non Destructive Inspection look phase	66	8.3	Tow aircraft to flightline
27	4.13	Fuel cell look phase	67	8.4	Aircraft refueled
28	5	Day 3	68	8.5	Engines prop leak checks
29	5.1	ISO APG Lube/fix phase	69	8.6	Weapons operational checks
30	5.2	Remove electrical power	70	8.7	Communication Navigation operational checks
31	5.3	Engine fix phase	71	8.8	Electronic warfare operational checks
32	5.4	Weapons fix phase	72	8.9	Sensors operational checks
33	5.5	Communication Navigation fix phase	73	8.10	Guidance and control operational checks
34	5.6	Electric/Environmental fix phase	74	8.11	Hydraulic leak checks
35	5.7	Electronic warfare fix phase	75	9	Day 7 Post ISO
36	5.8	Hydraulic fix phase	76	9.1	Engine performance runs*
37	5.9	Sensors fix phase	77	9.2	Fuel cell fix phase*
38	5.10	Corrosion fix phase	78	9.3	ISO end*
39	5.11	Guidance and Control fix phase			
40	5.12	Non Destructive Inspection fix phase			

Appendix L. CP2 WBS

* CP tasks

Line	WBS	Task	Line	WBS	Task
1	1	Pre ISO prep	41	6	
2	1.1	ISO Start	42	6.1	ISO - APG fix phase
3	1.2	Defuel aircraft	43	6.2	Eng fix phase
4	1.3	Depanel for ISO wash	44	6.3	Weapons fix phase
5	2	Pre ISO prep	45	6.4	Communication Navigation fix phase
6	2.1	Tow aircraft to washrack	46	6.5	Electric/Environmental fix phase
7	2.2	Wash aircraft	47	6.6	Electronic warfare fix phase
8	2.3	Tow aircraft to ISO hangar	48	6.7	Hydraulic fix phase
9	3		49	6.8	Sensors fix phase
10	3.1	Jack aircraft	50	6.9	Corrosion fix phase
11	3.2	Set up stands	51	6.10	Guidance and Control fix phase
12	3.3	Depanel aircraft	52	6.11	Non Destructive Inspection fix phase
13	3.4	Critical engine inspection	53	7	
14	4		54	7.1	ISO - APG fix/repanel
15	4.1	ISO APG Look/Lube phase	55	7.2	Eng fix/repanel
16	4.2	Engine look phase	56	7.3	Communication Navigation complete
17	4.3	Weapons look phase	57	7.4	Electric/Environmental complete
18	4.4	Apply electrical power	58	7.5	Electronic warfare complete
19	4.5	Communication/Navigation look phase	59	7.6	Hydraulic fix complete
20	4.6	Electric/Environmental look phase	60	7.7	Sensors fix complete
21	4.7	Electronic warfare look phase	61	7.8	Corrosion fix complete
22	4.8	Hydraulic look phase	62	7.9	Guidance and Control fix complete
23	4.9	Sensor's look phase	63	8	Post ISO
24	4.10	Corrosion look phase	64	8.1	Remove workstands
25	4.11	Guidance and Control look phase	65	8.2	Down jack aircraft
26	4.12	Non Destructive Inspection look phase	66	8.3	Tow aircraft to flightline
27	4.13	Fuel cell look phase	67	8.4	Aircraft refueled*
28	5		68	8.5	Engines prop leak checks
29	5.1	ISO APG Lube/fix phase	69	8.6	Weapons operational checks
30	5.2	Remove electrical power	70	8.7	Communication Navigation operational checks
31	5.3	Engine fix phase	71	8.8	Electronic warfare operational checks
32	5.4	Weapons fix phase	72	8.9	Sensors operational checks
33	5.5	Communication Navigation fix phase	73	8.10	Guidance and control operational checks
34	5.6	Electric/Environmental fix phase	74	8.11	Hydraulic leak checks
35	5.7	Electronic warfare fix phase	75	9	Post ISO
36	5.8	Hydraulic fix phase	76	9.1	Engine performance runs*
37	5.9	Sensors fix phase	77	9.2	Fuel cell fix phase*
38	5.10	Corrosion fix phase	78	9.3	ISO end*
39	5.11	Guidance and Control fix phase			
40	5.12	Non Destructive Inspection fix phase			

Appendix M. CP3 WBS

* CP tasks

Line	WBS	Task	Line	WBS	Task
1	1	Pre ISO prep	41	6	
2	1.1	ISO Start*	42	6.1	ISO - APG fix phase*
3	1.2	Defuel aircraft*	43	6.2	Eng fix phase
4	1.3	Depanel for ISO wash*	44	6.3	Weapons fix phase
5	2	Pre ISO prep	45	6.4	Communication Navigation fix phase
6	2.1	Tow aircraft to washrack*	46	6.5	Electric/Environmental fix phase
7	2.2	Wash aircraft*	47	6.6	Electronic warfare fix phase
8	2.3	Tow aircraft to ISO hangar*	48	6.7	Hydraulic fix phase
9	3		49	6.8	Sensors fix phase
10	3.1	Jack aircraft*	50	6.9	Corrosion fix phase
11	3.2	Set up stands*	51	6.10	Guidance and Control fix phase
12	3.3	Depanel aircraft*	52	6.11	Non Destructive Inspection fix phase
13	3.4	Critical engine inspection	53	7	
14	4		54	7.1	ISO - APG fix/repanel*
15	4.1	ISO APG Look/Lube phase*	55	7.2	Eng fix/repanel
16	4.2	Engine look phase	56	7.3	Communication Navigation complete
17	4.3	Weapons look phase	57	7.4	Electric/Environmental complete
18	4.4	Apply electrical power	58	7.5	Electronic warfare complete
19	4.5	Communication/Navigation look phase	59	7.6	Hydraulic fix complete
20	4.6	Electric/Environmental look phase	60	7.7	Sensors fix complete
21	4.7	Electronic warfare look phase	61	7.8	Corrosion fix complete
22	4.8	Hydraulic look phase	62	7.9	Guidance and Control fix complete
23	4.9	Sensor's look phase	63	8	Post ISO
24	4.10	Corrosion look phase	64	8.1	Remove workstands*
25	4.11	Guidance and Control look phase	65	8.2	Down jack aircraft*
26	4.12	Non Destructive Inspection look phase	66	8.3	Tow aircraft to flightline*
27	4.13	Fuel cell look phase	67	8.4	Aircraft refueled*
28	5		68	8.5	Engines prop leak checks*
29	5.1	ISO APG Lube/fix phase*	69	8.6	Weapons operational checks
30	5.2	Remove electrical power	70	8.7	Communication Navigation operational checks
31	5.3	Engine fix phase	71	8.8	Electronic warfare operational checks
32	5.4	Weapons fix phase	72	8.9	Sensors operational checks
33	5.5	Communication Navigation fix phase	73	8.10	Guidance and control operational checks
34	5.6	Electric/Environmental fix phase	74	8.11	Hydraulic leak checks
35	5.7	Electronic warfare fix phase	75	9	Post ISO
36	5.8	Hydraulic fix phase	76	9.1	Engine performance runs*
37	5.9	Sensors fix phase	77	9.2	Fuel cell fix phase*
38	5.10	Corrosion fix phase	78	9.3	ISO end*
39	5.11	Guidance and Control fix phase			
40	5.12	Non Destructive Inspection fix phase			

Appendix N. CC1 WBS

* CC tasks

Line	WBS	Task	Line	WBS	Task
1	1	Day 1 Pre ISO prep	54	6.5	Communication Navigation fix phase
2	1.1	ISO Start*	55	6.6	Electric/Environmental fix phase
3	1.2	RB|Flightline APG|Defuel aircraft-132	56	6.7	Electronic warfare fix phase
4	1.3	Defuel aircraft*	57	6.8	Hydraulic fix phase
5	1.4	Depanel for ISO wash*	58	6.9	Sensors fix phase
6	2	Day 2 Pre ISO prep	59	6.10	Corrosion fix phase
7	2.1	RB|Flightline APG|Tow aircraft to washrack-124	60	6.11	Guidance and Control fix phase
8	2.2	Tow aircraft to washrack*	61	6.12	Non Destructive Inspection fix phase
9	2.3	RB|Wash Contractors|Wash aircraft-122	62	6.13	FB|Non Destructive Inspection fix phase-80|Remove workstands-95
10	2.4	Wash aircraft*	63	7	Day 7
11	2.5	Tow aircraft to ISO hangar*	64	7.1	ISO - APG fix/repanel
12	3	Day 3	65	7.2	FB|ISO - APG fix/repanel-82|Remove workstands-95
13	3.1	RB|ISO APG|Jack aircraft-125	66	7.3	Eng fix/repanel*
14	3.2	Jack aircraft*	67	7.4	Communication Navigation complete
15	3.3	RB|ISO Eng|Set up stands-126	68	7.5	FB|Communication Navigation complete-86|Remove workstands-95
16	3.4	Set up stands*	69	7.6	Electric/Environmental complete
17	3.5	Depanel aircraft	70	7.7	FB|Electric/Environmental complete-87|Remove workstands-95
18	3.6	RB|ISO Eng|Critical engine inspection-11	71	7.8	Electronic warfare complete
19	3.7	Critical engine inspection*	72	7.9	FB|Electronic warfare complete-88|Remove workstands-95
20	4	Day 4	73	7.10	Hydraulic fix complete
21	4.1	ISO APG Look/Lube phase	74	7.11	FB|Hydraulic fix complete-89|Remove workstands-95
22	4.2	RB|ISO Eng|Engine look phase-25	75	7.12	Sensors fix complete
23	4.3	Engine look phase*	76	7.13	FB|Sensors fix complete-90|Remove workstands-95
24	4.4	Weapons look phase	77	7.14	Corrosion fix complete
25	4.5	Apply electrical power	78	7.15	FB|Corrosion fix complete-91|Remove workstands-95
26	4.6	Communication/Navigation look phase	79	7.16	Guidance and Control fix complete
27	4.7	Electric/Environmental look phase	80	7.17	FB|Guidance and Control fix complete-92|Remove workstands-95
28	4.8	Electronic warfare look phase	81	8	Day 8 Post ISO
29	4.9	Hydraulic look phase	82	8.1	RB|ISO APG|Remove workstands-95
30	4.10	Sensor's look phase	83	8.2	Remove workstands*
31	4.11	Corrosion look phase	84	8.3	Down jack aircraft*
32	4.12	Guidance and Control look phase	85	8.4	Tow aircraft to flightline*
33	4.13	Non Destructive Inspection look phase	86	8.5	Aircraft refueled*
34	4.14	Fuel cell look phase	87	8.6	Engines prop leak checks*
35	5	Day 5	88	8.7	Weapons operational checks
36	5.1	ISO APG Lube/fix phase	89	8.8	FB|Weapons operational checks-100|ISO end-129
37	5.2	Electrical power removed	90	8.9	Communication Navigation operational checks
38	5.3	FB|Electrical power removed-136|Engine fix phase-39	91	8.10	FB|Communication Navigation operational che-101|ISO end-129
39	5.4	Engine fix phase*	92	8.11	Electronic warfare operational checks
40	5.5	Weapons fix phase	93	8.12	FB|Electronic warfare operational checks -102|ISO end-129
41	5.6	Communication Navigation fix phase	94	8.13	Sensors operational checks
42	5.7	Electric/Environmental fix phase	95	8.14	FB|Sensors operational checks-103|ISO end-129
43	5.8	Electronic warfare fix phase	96	8.15	Guidance and control operational checks
44	5.9	Hydraulic fix phase	97	8.16	FB|Guidance and control operational checks-104|ISO end-129
45	5.10	Sensors fix phase	98	8.17	Hydraulic leak checks
46	5.11	Corrosion fix phase	99	8.18	FB|Hydraulic leak checks-105|ISO end-129
47	5.12	Guidance and Control fix phase	100	9	Day 9 Post ISO
48	5.13	Non Destructive Inspection fix phase	101	9.1	Engine performance runs*
49	6	Day 6	102	9.2	RB|Fuel cell|Fuel cell fix phase-108
50	6.1	ISO - APG fix phase	103	9.3	Fuel cell fix phase*
51	6.2	Eng fix phase*	104	9.4	ISO end*
52	6.3	Weapons fix phase	105	9.5	PB|ISO end-129
53	6.4	FB|Weapons fix phase-72|Remove workstands-95			

Appendix O. CC2 WBS

* CC tasks

Line	WBS	Task	Line	WBS	Task
1	1	Pre ISO prep	54	6.5	Communication Navigation fix phase*
2	1.1	ISO Start*	55	6.6	Electric/Environmental fix phase
3	1.2	RB|Flightline APG|Defuel aircraft-132	56	6.7	Electronic warfare fix phase
4	1.3	Defuel aircraft*	57	6.8	Hydraulic fix phase
5	1.4	Depanel for ISO wash*	58	6.9	Sensors fix phase
6	2	Pre ISO prep	59	6.10	Corrosion fix phase
7	2.1	RB|Flightline APG|Tow aircraft to washrack-124	60	6.11	Guidance and Control fix phase
8	2.2	Tow aircraft to washrack*	61	6.12	Non Destructive Inspection fix phase
9	2.3	RB|Wash Contractors|Wash aircraft-122	62	6.13	FB|Non Destructive Inspection fix phase-80|Remove workstands-95
10	2.4	Wash aircraft*	63	7	
11	2.5	Tow aircraft to ISO hangar*	64	7.1	ISO - APG fix/repanel
12	3		65	7.2	FB|ISO - APG fix/repanel-82|Remove workstands-95
13	3.1	RB|ISO APG|Jack aircraft-125	66	7.3	Eng fix/repanel
14	3.2	Jack aircraft*	67	7.4	FB|Eng fix/repanel-84|Remove workstands-95
15	3.3	RB|ISO Eng|Set up stands-126	68	7.5	Communication Navigation complete*
16	3.4	Set up stands*	69	7.6	Electric/Environmental complete
17	3.5	Depanel aircraft*	70	7.7	FB|Electric/Environmental complete-87|Remove workstands-95
18	3.6	RB|ISO Eng|Critical engine inspection-11	71	7.8	Electronic warfare complete
19	3.7	Critical engine inspection*	72	7.9	FB|Electronic warfare complete-88|Remove workstands-95
20	4		73	7.10	Hydraulic fix complete
21	4.1	ISO APG Look/Lube phase	74	7.11	FB|Hydraulic fix complete-89|Remove workstands-95
22	4.2	Engine look phase	75	7.12	Sensors fix complete
23	4.3	Weapons look phase	76	7.13	FB|Sensors fix complete-90|Remove workstands-95
24	4.4	Apply electrical power*	77	7.14	Corrosion fix complete
25	4.5	RB|Comm/Nav|Communication/Navigation look phase-115	78	7.15	FB|Corrosion fix complete-91|Remove workstands-95
26	4.6	Communication/Navigation look phase*	79	7.16	Guidance and Control fix complete
27	4.7	Electric/Environmental look phase	80	7.17	FB|Guidance and Control fix complete-92|Remove workstands-95
28	4.8	Electronic warfare look phase	81	8	Post ISO
29	4.9	Hydraulic look phase	82	8.1	RB|ISO APG|Remove workstands-95
30	4.10	Sensor's look phase	83	8.2	Remove workstands*
31	4.11	Corrosion look phase	84	8.3	Down jack aircraft*
32	4.12	Guidance and Control look phase	85	8.4	Tow aircraft to flightline*
33	4.13	Non Destructive Inspection look phase	86	8.5	Aircraft refueled*
34	4.14	Fuel cell look phase	87	8.6	RB|ISO Eng|Engines prop leak checks-99
35	5		88	8.7	Engines prop leak checks*
36	5.1	ISO APG Lube/fix phase	89	8.8	Weapons operational checks
37	5.2	Remove electrical power	90	8.9	FB|Weapons operational checks-100|ISO end-129
38	5.3	Engine fix phase	91	8.10	Communication Navigation operational checks
39	5.4	Weapons fix phase	92	8.11	FB|Communication Navigation operational che-101|ISO end-129
40	5.5	RB|Comm/Nav|Communication Navigation fix phase-49	93	8.12	Electronic warfare operational checks
41	5.6	Communication Navigation fix phase*	94	8.13	FB|Electronic warfare operational checks - 102|ISO end-129
42	5.7	Electric/Environmental fix phase	95	8.14	Sensors operational checks
43	5.8	Electronic warfare fix phase	96	8.15	FB|Sensors operational checks-103|ISO end-129
44	5.9	Hydraulic fix phase	97	8.16	Guidance and control operational checks
45	5.10	Sensors fix phase	98	8.17	FB|Guidance and control operational checks-104|ISO end-129
46	5.11	Corrosion fix phase	99	8.18	Hydraulic leak checks
47	5.12	Guidance and Control fix phase	100	8.19	FB|Hydraulic leak checks-105|ISO end-129
48	5.13	Non Destructive Inspection fix phase	101	9	Post ISO
49	6		102	9.1	Engine performance runs*
50	6.1	ISO - APG fix phase	103	9.2	RB|Fuel cell|Fuel cell fix phase-108
51	6.2	Eng fix phase	104	9.3	Fuel cell fix phase*
52	6.3	Weapons fix phase	105	9.4	ISO end*
53	6.4	FB|Weapons fix phase-72|Remove workstands-95	106	9.5	PB|ISO end-129

Appendix P. CC3 WBS

* CC tasks

Line	WBS	Task	Line	WBS	Task
1	1	Pre ISO prep	**53**	**6.5**	Communication Navigation fix phase
2	1.1	ISO Start*	**54**	**6.6**	Electric/Environmental fix phase
3	1.2	RB|Flightline APG|Defuel aircraft-132	**55**	**6.7**	Electronic warfare fix phase
4	1.3	Defuel aircraft*	**56**	**6.8**	Hydraulic fix phase
5	1.4	Depanel for ISO wash*	**57**	**6.9**	Sensors fix phase
6	2	Pre ISO prep	**58**	**6.10**	Corrosion fix phase
7	2.1	RB|Flightline APG|Tow aircraft to washrack-124	**59**	**6.11**	Guidance and Control fix phase
8	2.2	Tow aircraft to washrack*	**61**	**6.13**	FB|Non Destructive Inspection fix phase-80|Remove workstands-95
9	2.3	RB|Wash Contractors|Wash aircraft-122	**62**	**7**	
10	2.4	Wash aircraft*	**63**	**7.1**	ISO - APG fix/repanel*
11	2.5	Tow aircraft to ISO hangar*	**64**	**7.2**	Eng fix/repanel
12	3		**65**	**7.3**	FB|Eng fix/repanel-84|Remove workstands-95
13	3.1	RB|ISO APG|Jack aircraft-125	**66**	**7.4**	Communication Navigation complete
14	3.2	Jack aircraft*	**67**	**7.5**	FB|Communication Navigation complete-86|Remove workstands-95
15	3.3	RB|ISO Eng|Set up stands-126	**68**	**7.6**	Electric/Environmental complete
16	3.4	Set up stands*	**69**	**7.7**	FB|Electric/Environmental complete-87|Remove workstands-95
17	3.5	Depanel aircraft*	**70**	**7.8**	Electronic warfare complete
18	3.6	Critical engine inspection	**71**	**7.9**	FB|Electronic warfare complete-88|Remove workstands-95
19	4		**72**	**7.10**	Hydraulic fix complete
20	4.1	RB|ISO APG|ISO APG Look/Lube phase-14	**73**	**7.11**	FB|Hydraulic fix complete-89|Remove workstands-95
21	4.2	ISO APG Look/Lube phase*	**74**	**7.12**	Sensors fix complete
22	4.3	Engine look phase	**75**	**7.13**	FB|Sensors fix complete-90|Remove workstands-95
23	4.4	Weapons look phase	**76**	**7.14**	Corrosion fix complete
24	4.5	Apply electrical power	**77**	**7.15**	FB|Corrosion fix complete-91|Remove workstands-95
25	4.6	Communication/Navigation look phase	**78**	**7.16**	Guidance and Control fix complete
26	4.7	Electric/Environmental look phase	**79**	**7.17**	FB|Guidance and Control fix complete-92|Remove workstands-95
27	4.8	Electronic warfare look phase	**80**	**8**	
28	4.9	Hydraulic look phase	**81**	**8.1**	Remove workstands*
29	4.10	Sensor's look phase	**82**	**8.2**	Down jack aircraft*
30	4.11	Corrosion look phase	**83**	**8.3**	Tow aircraft to flightline*
31	4.12	Guidance and Control look phase	**84**	**8.4**	Aircraft refueled*
32	4.13	Non Destructive Inspection look phase	**85**	**8.5**	RB|ISO Eng|Engines prop leak checks-99
33	4.14	Fuel cell look phase	**86**	**8.6**	Engines prop leak checks*
34	4.15	FB|Fuel cell look phase-35|ISO - APG fix/repanel-82	**87**	**8.7**	Weapons operational checks
35	5		**88**	**8.8**	FB|Weapons operational checks-100|ISO end-129
36	5.1	ISO APG Lube/fix phase*	**89**	**8.9**	Communication Navigation operational checks
37	5.2	Remove electrical power	**90**	**8.10**	FB|Communication Navigation operational che-101|ISO end-129
38	5.3	Engine fix phase	**91**	**8.11**	Electronic warfare operational checks
39	5.4	Weapons fix phase	**92**	**8.12**	FB|Electronic warfare operational checks -102|ISO end-129
40	5.5	Communication Navigation fix phase	**93**	**8.13**	Sensors operational checks
41	5.6	Electric/Environmental fix phase	**94**	**8.14**	FB|Sensors operational checks-103|ISO end-129
42	5.7	Electronic warfare fix phase	**95**	**8.15**	Guidance and control operational checks
43	5.8	Hydraulic fix phase	**96**	**8.16**	FB|Guidance and control operational checks-104|ISO end-129
44	5.9	Sensors fix phase	**97**	**8.17**	Hydraulic leak checks
45	5.10	Corrosion fix phase	**98**	**8.18**	FB|Hydraulic leak checks-105|ISO end-129
46	5.11	Guidance and Control fix phase	**99**	**9**	Post ISO
47	5.12	Non Destructive Inspection fix phase	**100**	**9.1**	Engine performance runs*
48	6		**101**	**9.2**	RB|Fuel cell|Fuel cell fix phase-108
49	6.1	ISO - APG fix phase*	**102**	**9.3**	Fuel cell fix phase*
50	6.2	Eng fix phase	**103**	**9.4**	ISO end*
51	6.3	Weapons fix phase	**104**	**9.5**	PB|ISO end-129
52	6.4	FB|Weapons fix phase-72|Remove workstands-95			

Appendix Q. Current ISO Shift Schedule

	Specialist	Number of Specialists Needed (Current)									
		Day 1	Day 2	Day 3	Day 4	Day 5	Day 6	Day 7	Day 8	Day 9	Day 10
Dayshift	FL APG	7	7								
	Wash contractor		5								
	ISO APG			7	17	17	17	17	16	2	
	ISO Eng			8	10	8	8	8	2	2	
	E/E				2	2	2	2			
	EW				3	2	2	2	2		
	Hyd				5	2	2	2	1		
	Sensors				3	2	2	2	2		
	Corrosion				2	2	2	2			
	GCS				2	2	2	2	2		
	NDI				2	2	2				
	FC				1					2	
	CN				2	7	7	7	2		
	Weapons				2	2	2		2		
	Required	7	12	15	51	48	48	44	29	6	0
Swingshift	FL APG		7								
	Wash contractor										
	ISO APG				17	17	17	17			
	ISO Eng			4							
	E/E				2						
	EW								2		
	Hyd				5						
	Sensors										
	Corrosion										
	GCS										
	NDI										
	FC									2	
	CN				2	7	7	7			
	Weapons				2						
	Required	0	7	4	28	24	24	24	2	2	0
Midshift	FL APG										
	Wash contractor										
	ISO APG										
	ISO Eng										
	E/E										
	EW										
	Hyd										
	Sensors										
	Corrosion										
	GCS										
	NDI										
	FC									2	
	CN										
	Weapons				2						
	Required	0	0	0	2	0	0	0	0	2	0
	Aggregate Current	**7**	**19**	**19**	**81**	**72**	**72**	**68**	**31**	**10**	**0**

Total 379

Appendix R. Reduced ISO Shift Schedule

	Specialist	Number of Specialists Needed (CC2)						
		Day 1	Day 2	Day 3	Day 4	Day 5	Day 6	Day 7
Dayshift	FL APG	7						
	Wash contractor	5						
	ISO APG	7	17	17		16		
	ISO Eng	4	4	10	8	2		
	E/E		2	2	2			
	EW			3	2	2		
	Hyd		5	5	2			
	Sensors			3	2			
	Corrosion			2	2			
	GCS			2	2			
	NDI				2			
	FC			1		2		
	CN		2	2	7			
	Weapons		2	2	2			
	Required	23	32	49	31	22	0	0
Swingshift	FL APG							
	Wash contractor							
	ISO APG	17	17	17				
	ISO Eng		10	8				
	E/E		2	2				
	EW			3	2	2		
	Hyd		5	2		1		
	Sensors		3	2	2	2		
	Corrosion			2	2			
	GCS		2	2	2	2		
	NDI				2			
	FC					2		
	CN		2		7	2		
	Weapons		2	2		2		
	Required	17	43	40	17	13	0	0
Midshift	FL APG							
	Wash contractor							
	ISO APG							
	ISO Eng							
	E/E							
	EW							
	Hyd							
	Sensors							
	Corrosion							
	GCS							
	NDI							
	FC							
	CN				7			
	Weapons							
	Required	0	0	0	7	0	0	0
	Aggregate Reduced	40	75	89	55	35	0	0

Total 294

Appendix S. Surge ISO Shift Schedule

	Specialist	Number of Specialists Needed (CC3)						
		Day 1	Day 2	Day 3	Day 4	Day 5	Day 6	Day 7
Dayshift	FL APG	7						
	Wash contractor	5						
	ISO APG	7	17	17				
	ISO Eng	8	10	2				
	E/E		2					
	EW		3					
	Hyd		5					
	Sensors		3					
	Corrosion		2					
	GCS		2					
	NDI							
	FC		1					
	CN		7					
	Weapons		2					
	Required	27	54	19	0	0	0	0
Swingshift	FL APG							
	Wash contractor							
	ISO APG		17	2				
	ISO Eng	4	8					
	E/E		2					
	EW		2	2				
	Hyd		2	1				
	Sensors		2	2				
	Corrosion		2					
	GCS		2	2				
	NDI		2					
	FC			2				
	CN	2	7	2				
	Weapons		2	2				
	Required	6	48	15	0	0	0	0
Midshift	FL APG							
	Wash contractor							
	ISO APG	17	17					
	ISO Eng							
	E/E	2						
	EW		2					
	Hyd	5		1				
	Sensors		2	2				
	Corrosion		2					
	GCS		2	2				
	NDI		2					
	FC			2				
	CN	7		2				
	Weapons		2	2				
	Required	31	29	11	0	0	0	0
								Total
	Aggregate Surge	64	131	45	0	0	0	0	240

Bibliography

Blanchard, Benjamin S. *Logistics Engineering and Management*. Englewood Cliffs NJ. Prentice-Hall. 1986

Bowers, J. "Criticality in Resource Constrained Networks." *Journal of the Operational Research Society*. 46: 80-91 (December 1995).

Christofides, N., R. Alvarez-Valdes, and J. Tamarit. "Project Scheduling with Resource Constraints: A Branch and Bound Approach." *European Journal of Operational Research.* 29: 262-273 (Jun 1987).

Cook, Stephen C. *Applying Critical Chain to Improve the Management of Uncertainty in Projects*. MS thesis, Sloan School of Management and the Department of Electrical Engineering and Computer Science, Massachusetts Institute of Technology, 1998.

Creswell, John W. *Research Design Qualitative &Quantitative Approaches*. Thousand Oaks CA. SAGE Publications, Inc. 1994.

Devore, Jay L. *Probability and Statistics For Engineering and the Sciences*. Pacific Grove CA. Brooks/Cole. 2000.

Elton, Jeffrey and Justin Roe. "Bringing Discipline to Project Management," *Harvard Business Review,* 76: 153-160 (March/April 1998).

Evers, Philip T. *The Impact of Transhipments on Safety Stock Requirements*. Journal of Business Logistics, 17: 109-133,) (1996).

Ferrell, Jeffrey. Structural Maintenance Technician, USAF, Hurlburt Field FL. Personal Correspondence. 5 November 2001.

Goldratt, Eliyahu M. and Jeff Cox. *The Goal.* Great Barrington, Massachusetts: North River Press, 1984.

Goldratt, Eliyahu M. *What is This Thing Called Theory of Constraints and How Should It Be Implemented?*. Great Barrington MA: North River Press, 1990.

Goldratt, Eliyahu M. *Critical Chain.* Great Barrington MA: North River Press, 1997.

"Guide to the Project Management Body of Knowledge". Newton Square PA: Project Management Institute, Inc., 1996.

"Guide to the Project Management Body of Knowledge". Newton Square PA: Project Management Institute, Inc., 2000.

Harris Semiconductor. Avraham Y. Goldratt Institute. n.pag. http://www.goldratt.com/harriserp.htm 20 November 2001.

Ho, C. *An Examination of a Distribution Resource Planning Problem: DRP System Nervousness* Journal of Business Logistics. v. 13, n. 2,125-149, (1992).

Horowitz, Joseph. *Critical Path Scheduling.* New York: The Ronald Press Company, 1967.

Kahneman, Slovic, and Tversky, "Jugdement Under Uncertainty". Cambridge University Press, 1982.

Krajewski, Lee J. and Larry P. Ritzman. *Operations Management: Strategy and Analysis*. Reading MA: Addison-Wesley Publishing Company, Inc. 1999.

Kolisch, R., A. Sprecher, and A. Drexl. *Characterization and Generation of a General Class of Resource-Constrained Project Scheduling Problems* Management Science. v. 41, n. 10, 1693-1703, (Oct 1995).

Lord Corporation: Multi Project Management. Avraham Y. Goldratt Institute. n.pag. http://www.goldratt.com/lord.htm. 20 November 2001.

Mathcad 2000 User's Guide. Cambridge MA. Mathsoft Inc. 1999.

McClave, James T. and P. George Benson. *Statistics for Business and Economics*. San Francisco. Dellen Publishing Company. 1988.

McClave, James. T and others. *Statistics For Business and Economics.* Upper Saddle River NJ. Prentice-Hall, Inc. 2001.

"MC-130E/H Combat Talon I/II" Air Force Aircraft Fact Sheet. n. pag. http://www.af.mil/news/factsheets/MC_130E_H_Combat_Talon_I_II.html. 25 October 2001.

Newbold, Robert C. *Project Management in the Fast Lane; Applying the Theory of Constraints*. Boca Raton FL: St Lucie Press, 1998.

Nicholas, John M. *Project Management for Business and Technology: Principles and Practice*. Upper Saddle River NJ: Prentice Hall, 2001.

Office of the Inspector General. "Additional Information Related to Improvements Needed in the Department of Transportation." http://www.dot.gov/oig/statements/attach.html. 25 October 2001.

Oguz, O., and H. Bala. *A Comparative Study Of Computational Procedures For The Resource Constrained Project Scheduling Problem* European Journal of Operational Research. v. 72, i. 2. 406-416, (Jan 1994).

Orman Grubb Furniture. Avraham Y. Goldratt Institute. n.pag. http://www.goldratt.com/orman.htm. 20 November 2001.

Ozdamar, L., and G. Ulusoy. *A Survey On The Resource-Constrained Project Scheduling Problem* IIE Transactions. 574-586, (Oct 1995).

Parkinson, Cyril Northcote. *Parkinson's Law.* n.page. http://www.heretical.com/miscella/parkinsl.html. (7 Feb. 1995).

Spinner, Pete M. *Elements of Project Management, Plan, Schedule & Control.* Englewood Cliffs NJ: Prentice Hall, 1992.

Swartz, Stephen M. *The Effects of Variability and Disruption of Project Stability, Duration, and Net Present Value.* Michigan State University, East Lansing MI. September 1999.

Tallon, William J. *The Impact of Inventory Centralization on Aggregate Safety Stock: The Variable Supply Lead Time Case*. Journal of Business Logistics, 14: 185-203 (1993).

TOC in Colombia, Venezuela and Costa Rica: From The Goal to the Desirable Future. The TOC Times. n.pag. http://www.goldratt.com/toctimes/september2001.html #award. 20 November 2001a.

U.S Government Accounting Office. "Information Management and Technology." Document GAO/HR-97-9, 1997.

Willis, R. "Critical Path Analysis and Resource Constrained Project Scheduling- Theory and Practice." *European Journal of Operational Research*, 21: 149-155 (1985).

Zinn, Walter, Michael Levy, Donald J. Bowersox. *Measuring the Effect of Inventory Centralization/Decentralization on Aggregate Safety Stock: The "Square Root Law" Revisited.* Journal of Business Logistics, 10: 1-14 (1989).

Vita

Captain Mattioda graduated from South Vermillion High School in Clinton, Indiana and enlisted in the Air Force in June 1985. After earning Honor Graduate awards at basic training and technical school, he was assigned to Bergstrom AFB, Texas. During the next 12.5 years, he attained the rank of Master Sergeant with assignments at Nellis AFB, Nevada, where he was a member of the USAF Air Demonstration Squadron (THUNDERBIRDS); Incirlik AB, Turkey; and Grand Forks AFB, North Dakota.

During his enlisted career, he received four Commendation medals and the John Levitow award at NCO Prepatory School, Distinguished Graduate honors from the NCO Leadership course and the USAFE NCO Academy.

Capt Mattioda earned an Associate Degree in Aircraft Accessory Systems Technology from the Community College of the Air Force in 1990 and a Bachelors of Science degree (with Dean's List honors) in Professional Aeronautics from Embry Riddle Aeronautical University in July 1997. In February 1998, he graduated from USAF Officer Training School (OTS) earning Distinguished and Honor Graduate awards.

He was assigned to Hurlburt Field, Florida after OTS. Capt Mattioda attended Aircraft Maintenance Officer Course and graduated in September 1998 with the Honor Graduate award. While at Hurlburt Field, he was decorated with his fifth Commendation medal and was the 16 AGS and 16 LG CGO of the Year and Lance P. Sijan award winner. In August 2000, he entered the Graduate School of Engineering and Management, Air Force Institute of Technology. Capt Mattioda is married and has three sons.

REPORT DOCUMENTATION PAGE

Form Approved
OMB No. 074-0188

The public reporting burden for this collection of information is estimated to average 1 hour per response, including the time for reviewing instructions, searching existing data sources, gathering and maintaining the data needed, and completing and reviewing the collection of information. Send comments regarding this burden estimate or any other aspect of the collection of information, including suggestions for reducing this burden to Department of Defense, Washington Headquarters Services, Directorate for Information Operations and Reports (0704-0188), 1215 Jefferson Davis Highway, Suite 1204, Arlington, VA 22202-4302. Respondents should be aware that notwithstanding any other provision of law, no person shall be subject to an penalty for failing to comply with a collection of information if it does not display a currently valid OMB control number.
PLEASE DO NOT RETURN YOUR FORM TO THE ABOVE ADDRESS.

1. REPORT DATE *(DD-MM-YYYY)*	2. REPORT TYPE	3. DATES COVERED *(From – To)*
20-03-2002	Master's Thesis	1 Mar 2001 – 20 Mar 2002

4. TITLE AND SUBTITLE
USE OF CRITICAL CHAIN SCHEDULING TO INCREASE AIRCRAFT AVAILABILITY

5a. CONTRACT NUMBER

5b. GRANT NUMBER

5c. PROGRAM ELEMENT NUMBER

6. AUTHOR(S)
Mattioda, Daniel D., Capt, USAF

5d. PROJECT NUMBER

5e. TASK NUMBER

5f. WORK UNIT NUMBER

7. PERFORMING ORGANIZATION NAMES(S) AND ADDRESS(S)
Air Force Institute of Technology
Graduate School of Engineering and Management (AFIT/EN)
2950 P Street, Building 640, WPAFB OH 45433-8865

8. PERFORMING ORGANIZATION REPORT NUMBER
AFIT/GLM/ENS/02-11

9. SPONSORING/MONITORING AGENCY NAME(S) AND ADDRESS(ES)
Kent A. Mueller, Colonel, USAF, Director of Logistics
Air Force Special Operations Command (AFSOC)
100 Bartley St, Hurlburt Fld FL 32544 (850) 884 2371
e-mail: Kent.Muller@hurlburt.af.mil

10. SPONSOR/MONITOR'S ACRONYM(S)

11. SPONSOR/MONITOR'S REPORT NUMBER(S)

12. DISTRIBUTION/AVAILABILITY STATEMENT
APPROVED FOR PUBLIC RELEASE; DISTRIBUTION UNLIMITED.

13. SUPPLEMENTARY NOTES

14. ABSTRACT

United States Air Force Special Operations Command (AFSOC) has a minimal number of aircraft at its disposal. As a result, the aircraft are considered high demand, low-density (small number in Air Force inventory) weapon systems. Any chance to increase aircraft availability would greatly enhance the capability of AFSOC.

Isochronal maintenance (ISO) conducted once every 365 days (per AFI for C- 130 aircraft) provides the best opportunity to increase aircraft availability by improving the scheduling of tasks and accurately estimating the inspection duration. Scheduled maintenance portrays the characteristics of projects, therefore, this thesis proposed that Critical Chain (CC) scheduling, a project management technique, could provide an improved ISO schedule reducing aircraft downtime.

The ISO inspection process was modeled three ways (1) existing process, (2) task constraints removed, and (3) task and resource constraints removed. 100 simulated aircraft inspections took place in each model. The simulated duration times were compared to estimates provided by the use of Critical Path and Critical Chain scheduling techniques.

Critical Chain scheduling techniques did not directly increase aircraft availability. However, Critical Chain scheduling did identify the potential for increasing aircraft availability by removing policy and scheduling constraints.

15. SUBJECT TERMS

16. SECURITY CLASSIFICATION OF:			17. LIMITATION OF ABSTRACT	18. NUMBER OF PAGES	19a. NAME OF RESPONSIBLE PERSON
a. REPORT	b. ABSTRACT	c. THIS PAGE			Maj Stephen M. Swartz
U	**U**	**U**	**UU**	122	**19b. TELEPHONE NUMBER** *(Include area code)* (937) 255-6565, ext 4284 Stephen.Swartz@afit.af.edu

Standard Form 298 (Rev. 8-98)
Prescribed by ANSI Std. Z39-18